# U.S. Coast Guard

## OIL SPILL RESPONSE OFFSHORE

# IN-SITU BURN OPERATIONS MANUAL

**U.S. Coast Guard Research and Development Center**
**1082 Shennecossett Road, Groton, CT 06340-6048**

**Report No. CG-D-06-03**

# OIL SPILL RESPONSE OFFSHORE,

# IN-SITU BURN OPERATIONS MANUAL

**FINAL REPORT**

**March 2003**

This document is available to the U.S. public through the
National Technical Information Service, Springfield, VA 22161

Prepared for:

U.S. Department of Homeland Security
United States Coast Guard
Marine Safety and Environmental Protection (G-M)
Washington, DC 20593-0001

# N O T I C E

This document is disseminated under the sponsorship of the U.S. Department of Homeland Security in the interest of information exchange. The United States Government assumes no liability for its contents or use thereof.

The United States Government does not endorse products or manufacturers. Trade or manufacturers' names appear herein solely because they are considered essential to the object of this report.

This report does not constitute a standard, specification, or regulation.

Marc B. Mandler, Ph.D.
Technical Director
United States Coast Guard
Research & Development Center
1082 Shennecossett Road
Groton, CT 06340-6048

Technical Report Documentation Page

| 1. Report No. | 2. Government Accession Number | 3. Recipient's Catalog No. |
|---|---|---|
| CG-D-06-03 | ADA418267 | |

| 4. Title and Subtitle | 5. Report Date |
|---|---|
| Oil Spill Response Offshore, In-Situ Burn Operations Manual | March 2003 |
| | 6. Performing Organization Code<br>Project No. 4001/4120.5.1 |
| 7. Author(s)<br>Ian Buist, Thomas Coe, Donald Jensen, Steven Potter, Elizabeth Anderson, Kenneth Bitting and Kurt Hansen | 8. Performing Organization Report No.<br>R&DC 544 |

| 9. Performing Organizations | | 10. Work Unit No. (TRAIS) |
|---|---|---|
| Anteon Corporation<br>240 Oral School Road, Suite 105<br>Mystic, CT 06355 | U. S. Coast Guard<br>Research & Development Center<br>1082 Shennecossett Road<br>Groton, CT 06340-6048 | 11. Contract or Grant No.<br>DTCG39-00-D-R00008/<br>DTCG32-01-F-100016 |

| 12. Sponsoring Organization Name and Address | 13. Type of Report & Period Covered |
|---|---|
| U.S. Department of Homeland Security<br>United States Coast Guard<br>Marine Safety and Environmental Protection (G-M)<br>Washington, DC 20593-0001 | Final |
| | 14. Sponsoring Agency Code<br>Commandant (G-MOR)<br>U. S. Coast Guard Headquarters<br>Washington, DC 20593-0001 |

15. Supplementary Notes

The U.S. Coast Guard Research & Development Center's technical point of contact is Kurt Hansen 860-441-2865, email khansen@rdc.uscg.mil.

16. Abstract (MAXIMUM 200 WORDS)

In-situ burning (ISB) of oil in the marine environment is a viable alternative response technology, but it has been seldom used during actual responses due to lack of resources, incomplete plans, and health and safety concerns. The USCG recognized the need to develop an ISB operations manual to facilitate the effective use of ISB by spill response managers. The intent of the manual is to assist field personnel in managing, conducting, and monitoring successful ISB and to communicate the risks and benefits of this response method.

Development of the manual was based on proven technologies, approaches, and lessons learned from several recent field exercises conducted by the USCG, and years of field experience and testing. The manual makes extensive use of graphics, nomographs, photos, decision trees, checklists, matrices, and to-the-point advice.

The manual includes a summary Decision Guide for quick reference of key steps in making a "go/no-go" decision, and in assessing the information, equipment, and personnel requirements. Detailed descriptions of the feasibility of ISB for a given situation, the equipment involved in a successful burn, safety and risk factors including mitigating measures, and operational procedures are provided to support decision-making and operations.

| 17. Key Words | 18. Distribution Statement |
|---|---|
| ISB, marine spills, in-situ burning, fire boom operations, fire-resistant boom, oil spill response | This document is available to the U.S. public through the National Technical Information Service, Springfield, VA 22161. |

| 19. Security Class (This Report) | 20. Security Class (This Page) | 21. No of Pages | 22. Price |
|---|---|---|---|
| UNCLASSIFIED | UNCLASSIFIED | | |

Form DOT F 1700.7 (8/72) Reproduction of form and completed page is authorized.

# ACKNOWLEDGEMENTS

Special thanks go to Environment Canada for providing the original artwork used in many figures of this manual. A. Allen was contracted to provide peer review comments that were used to improve the utility and accuracy of the manual. PCCI of Alexandria, Virginia, and SL Ross Environmental Research were contracted to update the ISB Decision Guide figures and tables 3 and 4 of this manual. Thanks to the ISB equipment manufacturers for providing the technical product information and drawings used in appendix C.

In addition, the USCG would like to thank Mr. Doug O' Donovan, Marine Spill Response Corporation (MSRC); Arlen Tideman, NRC; CDR Mike Drieu, Eighth Coast Guard District; CDR Ed Stanton, Gulf Strike Team; Mr. Buzz Martin, Texas General Land Office (TGLO); Mr. Phil Glenn, Clean Channel; and CDR Meridith Austin, Coast Guard Pacific Strike Team for their contributions to this effort.

# EXECUTIVE SUMMARY

When oil is spilled in the marine environment, the traditional response has been to attempt to contain it with floating booms and recover it with skimmers. For large spills, this approach has seldom been very successful, in part due to the tremendous logistical difficulties in storing and handling the large volume of oil and water that is typically collected. Traditional recovery techniques are also inherently slow relative to the speed at which oil can spread to cover vast areas of the sea, and the speed at which the oil can move to threaten sensitive resources. In some spill situations, burning the oil in place is a viable alternative and offers several significant advantages over containment and recovery. This technique is commonly referred to as in-situ burning (ISB). The oil is first collected to create a burnable thickness and is then ignited using special igniters that can be deployed from a helicopter or a boat. Burning oil generates a tremendous amount of heat; specialized fire-resistant boom is required to contain it. Trained personnel and specialized equipment are required to perform the operation safely and effectively.

The main advantage of in-situ burning is the ability to quickly remove large amounts of oil from the marine environment. While it is not the answer to every oil spill problem, in some offshore spill scenarios ISB can provide a more efficient and more effective alternative to mechanical recovery by eliminating or greatly reducing the huge recovery, transport, disposal, and decontamination efforts. In full-scale field tests, removal efficiencies greater than 95 percent have been observed. Following a burn, a relatively inert residue remains that can usually be recovered using conventional mechanical means.

An obvious drawback to ISB is the large smoke plume that is generated. In general, however, the smoke plume is not a safety threat to the public nor to the environment because it has very low toxicity and readily dissipates. The burn or no-burn issue is essentially a trade-off and, in many situations, the environmental threats posed by the burning process will be much less than leaving the oil on the water surface.

ISB has been seldom used during actual responses due to misinformation, lack of resources, incomplete plans, and health and safety concerns. This ISB Operations Manual facilitates the effective use of ISB by spill response managers and operators in the offshore arena. It provides a summary of the principles governing oil combustion and the products generated from an ISB on water. It does not address burning on shore, near shore or in ice-covered waters. The manual consolidates all proven technologies, strategies, and knowledge. It does not delve into unproven methods or prototype equipment that are undergoing tests or evaluations. A Decision Guide is provided in Chapter 2 for quick assessments in determining if and how ISB technology may be used for a response operation. Chapters 3 through 6 and the appendices are provided to supplement the Decision Guide chapter with supporting information and more operational guidance when required. Facts are clearly defined and separated from the opinions of the authors. The risks and potential benefits of ISB are also covered. The manual focuses on organizations, procedures, and equipment that are required for ISB and readily available in the United States and its territories.

For ISB to be effective for a given oil spill, it must be implemented quickly before the limited window of opportunity closes. This duration of opportunity can be as small as several hours or extend to several days depending upon the oil and the environmental conditions. Planning, special equipment, and training specific to ISB must be in place before the spill. Regional Response Teams (RRTs) and local governmental approval agencies are encouraged to be involved in establishing pre-approved ISB zones to overcome some of these hurdles. This manual addresses confidence issues and political considerations in the somewhat intimidating fire-based response. This manual will allow the response community to take full advantage of ISB technology as another tool in its arsenal for improved spill response. If used effectively, ISB will serve to minimize environmental damage and human use impact resulting from large offshore oil spills.

# TABLE OF CONTENTS

**EXECUTIVE SUMMARY** ..... **v**

**LIST OF FIGURES** ..... **xiv**

**LIST OF TABLES** ..... **xv**

**LIST OF ABBREVIATIONS AND ACRONYMS** ..... **xvi**

**1. INTRODUCTION** ..... **1**

**1.1 OBJECTIVE** ..... 1

**1.2 BACKGROUND** ..... 1

**1.3 WHAT IS ISB?** ..... 2

**1.4 WHY CONSIDER ISB** ..... 3

**1.5 MANUAL ORGANIZATION** ..... 3

**2. DECISION GUIDE** ..... **6**

**2.1 INFORMATION REQUIRED** ..... **6**
2.1.1 OVERALL CHECKLISTS FOR EXPERIENCED USERS ..... 6
2.1.1.1 Pre-spill Planning List ..... 6
2.1.1.2 Real-time Surveillance Objectives ..... 6
2.1.1.3 Ongoing Information Requirements ..... 7

**2.2 DECISION PROCESS CHECKLISTS FLOWCHART** ..... **7**
2.2.1 INFORMATION EVALUATION ..... 7
2.2.1.1 Overview of Decision-making Process ..... 7
2.2.1.2 Determination of Time-Line ..... 9
2.2.2 RATIONALE FOR ISB ..... 9
2.2.2.1 Is ISB Justified? ..... 9
2.2.2.2 Likelihood of Success ..... 10
2.2.3 FEASIBILITY DECISION TOOL ..... 10
2.2.4 APPROVALS ..... 15
2.2.4.1 Pre-approval Process ..... 15
2.2.4.2 Case-by-case Approval ..... 16
2.2.5 RESOURCES ..... 17
2.2.5.1 Primary Equipment for In-Situ Burning ..... 17
2.2.5.2 Logistics - Vessels and Aircraft ..... 17
2.2.5.3 Safety Equipment ..... 18
2.2.5.4 Personnel Requirements ..... 18
2.2.6 RISK ..... 19
2.2.6.1 Risk Management Approach ..... 19
2.2.6.2 Evaluation and Control of Risks ..... 19
2.2.6.3 Mitigative Measures ..... 20

2.2.7 OPERATION PLAN ..... 21
2.2.7.1 Command Structure ..... 21
2.2.7.2 Surveillance ..... 21
2.2.7.3 Safety ..... 21
2.2.7.4 Containment ..... 22
2.2.7.5 Ignition ..... 22
2.2.7.6 Control/Extinction ..... 22
2.2.7.7 Residue Recovery ..... 23
2.2.7.8 Monitoring ..... 23
2.2.7.9 Evaluation of Effectiveness ..... 23

**3. FEASIBILITY CONSIDERATIONS ..... 24**

**3.1 SOURCE CONDITIONS ..... 24**
3.1.1 LOCATION ..... 24
3.1.2 IGNITED VS. UNIGNITED ..... 24
3.1.3 VOLUME/FLOW RATE ..... 24

**3.2 OIL PROPERTIES/CONDITIONS ..... 25**
3.2.1 COMBUSTIBLE NATURE ..... 26
3.2.2 OTHER OIL CHARACTERISTICS ..... 27
3.2.3 OIL WEATHERING EFFECTS ON IGNITION/BURNING ..... 27
3.2.3.1 Emulsification ..... 27
3.2.3.2 Loss of Volatile Content ..... 28
3.2.4 OIL THICKNESS EFFECTS ..... 28
3.2.4.1 Ignition/Burning ..... 28
3.2.4.2 Burn Efficiency ..... 30

**3.3 WEATHER AND ENVIRONMENTAL CONDITIONS ..... 30**
3.3.1 CONTAINMENT EFFECTS ..... 30
3.3.1.1 Waves ..... 31
3.3.1.2 Currents ..... 31
3.3.1.3 Wind Speed and Direction ..... 31
3.3.2 OTHER ENVIRONMENTAL EFFECTS ..... 32
3.3.2.1 Rain ..... 32
3.3.2.2 Daylight ..... 32
3.3.2.3 Visibility/Flying Conditions ..... 32
3.3.2.4 Atmospheric Mixing - Plume Effects ..... 32

**3.4 TRAJECTORY ..... 33**
3.4.1 OIL SLICK TRAJECTORY ..... 33
3.4.2 BURN RESIDUE MOVEMENT ..... 33
3.4.3 SMOKE PLUME COMPOSITION AND TRAJECTORY ..... 34

**4. EQUIPMENT ..... 35**

**4.1 CONTAINMENT ..... 35**
4.1.1 FIRE-RESISTANT BOOM ..... 36
4.1.1.1 Intrinsically Fire Resistant ..... 36
4.1.1.2 Actively Water Cooled ..... 37
4.1.1.3 Ad-Hoc Methods ..... 38
4.1.2 OFFSHORE BOOM ..... 38
4.1.3 HIGH-SPEED CONTAINMENT SYSTEMS ..... 39

**4.2 IGNITERS ..... 40**
4.2.1 HELI-TORCH ..... 41
4.2.2 HANDHELD IGNITERS ..... 42
4.2.3 AD-HOC IGNITERS ..... 42
4.2.4 ADDITIVES ..... 43
4.2.4.1 Ignition Promoters ..... 43
4.2.4.2 Combustion Promoters ..... 43
4.2.4.3 Smoke Inhibitors ..... 44

**4.3 VESSELS ..... 44**
4.3.1 VESSEL TYPES/FUNCTIONS ..... 44
4.3.2 MINIMUM VESSEL REQUIREMENTS ..... 45
4.3.3 DESIRED VESSEL MANEUVERING CHARACTERISTICS ..... 46

**4.4 AIRCRAFT ..... 46**
4.4.1 AIRCRAFT TYPES/FUNCTIONS ..... 47
4.4.2 MINIMUM AIRCRAFT REQUIREMENTS ..... 48
4.4.3 DESIRED AIRCRAFT CHARACTERISTICS ..... 48

**4.5 RECOVERY EQUIPMENT ..... 48**
4.5.1 SKIMMERS ..... 48
4.5.1.1 Minimum Skimmer Requirements ..... 49
4.5.1.2 Desired Skimmer Characteristics ..... 49
4.5.2 OTHER RECOVERY EQUIPMENT ..... 49

**5. SAFETY AND RISK ..... 50**

**5.1 ENVIRONMENTAL IMPACTS ..... 50**
5.1.1 SMOKE ..... 51
5.1.2 BURN RESIDUE ..... 51
5.1.3 FIRE ..... 52

**5.2 RESPONSE PERSONNEL ..... 52**
5.2.1 SITE SAFETY PLAN (SSP) ..... 52
5.2.2 SAFETY ZONE GUIDELINES ..... 53
5.2.3 SAFE PRACTICES ..... 54
5.2.3.1 Vessels ..... 54
5.2.3.2 Boom Handling ..... 55
5.2.3.3 Fire Control ..... 55
5.2.3.4 Aircraft ..... 56
5.2.3.5 Igniter Operations ..... 56
5.2.4 PERSONAL PROTECTIVE EQUIPMENT CONSIDERATIONS ..... 57

**5.3 PUBLIC HEALTH AND SAFETY ..... 57**
5.3.1 IDENTIFICATION OF POTENTIAL PUBLIC HEALTH AND SAFETY CONCERNS ..... 57
5.3.1.1 Plume Particulate Exposure ..... 58
5.3.1.2 Proximity to Shorelines, Towns, Airports, etc. ..... 60
5.3.1.3 Traffic Control ..... 60
5.3.2 COORDINATION WITH LOCAL AUTHORITIES ..... 60
5.3.3 ESTABLISHMENT OF EXCLUSION AND SAFETY ZONES (AIR, LAND, AND WATER) ..... 60
5.3.4 NOTIFICATION AND PUBLIC EDUCATION ..... 61

**5.4 SAMPLING/MONITORING EQUIPMENT (SMART) ..... 61**

**6. BURN OPERATIONS ..... 63**

**6.1 ORGANIZATION ..... 63**
6.1.1 ISB SPECIFIC CONSIDERATIONS (NIIMS/ICS) ..... 63
6.1.2 ORGANIZATION OF TACTICAL RESOURCES ..... 63
6.1.3 ORGANIZATION OF SMART RESOURCES ..... 65

**6.2 COMMUNICATIONS ..... 65**
6.2.1 IMPORTANCE OF COMMUNICATIONS TO SAFE AND SUCCESSFUL OPERATIONS ..... 66
6.2.2 COMMUNICATIONS PLAN ORGANIZATION ..... 66
6.2.3 COMMUNICATIONS EQUIPMENT ..... 66
6.2.4 FREQUENCIES ..... 67
6.2.5 COMMUNICATIONS PROCEDURES ..... 67

**6.3 DECISION SUPPORT SYSTEMS ..... 68**
6.3.1 INTEGRATION OF DATA ..... 68
6.3.2 ALLOCATION AND TRACKING OF RESOURCES ..... 68
6.3.3 DISPLAY AND DISSEMINATION OF INFORMATION ..... 68
6.3.4 REPORTING ..... 69

**6.4 MOBILIZATION ..... 69**
6.4.1 BASE/STAGING AREA FACILITY SELECTION ..... 69
6.4.1.1 Pier/Dock Facility ..... 69
6.4.1.2 Helibase ..... 69
6.4.2 VESSEL LOAD OUT/PREPARATION ..... 70
6.4.2.1 Equipment Dockside Arrival Inspection ..... 70
6.4.2.2 Load Out of Vessel ..... 70
6.4.2.3 Final System Checkout before Getting Underway ..... 70
6.4.3 HELI-TORCH PREPARATION ..... 70
6.4.3.1 Inspection of Equipment ..... 71
6.4.3.2 Set Up Equipment and Rig Helicopter ..... 71
6.4.3.3 System Checkout Before Helicopter Launch ..... 71

**6.5 OIL COLLECTION ..... 72**
6.5.1 BOOM BASICS ..... 72
6.5.2 OIL THICKNESS CONTROL ..... 72

**6.6 IGNITION PROCEDURES ..... 73**
6.6.1 AERIAL IGNITION ..... 73
6.6.2 VESSEL-BASED IGNITION ..... 74

**6.7 BURN PROCEDURES ..... 74**
6.7.1 CONTINUOUS BURNING ..... 75
6.7.2 BATCH BURNING ..... 75
6.7.2.1 Independent Task Force Procedure ..... 75
6.7.2.2 Coordinated Task Force ..... 76
6.7.3 FIRE EXTINCTION ..... 80
6.7.4 UNCONTAINED FIRE ..... 80
6.7.5 VESSEL FIRE ..... 81

**6.8 OTHER OIL CONSOLIDATION TACTICS ..... 81**
6.8.1 V-SHAPED BOOMING ..... 81
6.8.2 DIVERSION ..... 82

**6.9 POST-BURN ANALYSIS ..... 82**
6.9.1 ESTIMATION OF BURN EFFECTIVENESS ..... 82
6.9.2 ASSESSMENT OF EQUIPMENT CONDITION ..... 83
6.9.3 FOLLOW-UP MONITORING ..... 83

**6.10 BURN RESIDUE ..... 84**
6.10.1 NEED FOR RECOVERY ..... 84
6.10.2 RECOVERY TECHNIQUES ..... 84
6.10.3 STORAGE AND DISPOSAL ..... 85

**6.11 EQUIPMENT CLEANUP ..... 85**
6.11.1 ESTABLISH DECONTAMINATION ZONES ..... 86
6.11.2 ISB UNIQUE INSPECTION AND CLEANUP CONSIDERATIONS ..... 86

**REFERENCES AND RESOURCES ..... R-1**

**APPENDIX A POLITICAL AND PROCEDURAL CONSIDERATIONS ..... A-1**

**A.1 HISTORICAL HURDLES ..... A-1**
A.1.1 LACK OF ISB OPERATIONS AND TRAINING EXPERIENCE ..... A-1
A.1.2 PUBLIC PERCEPTIONS ..... A-1
A.1.3 RACE AGAINST TIME ..... A-2

**A.2 AGENCY/ORGANIZATION ROLES AND RESPONSIBILITIES ..... A-2**
A.2.1 PRINCIPAL FEDERAL AGENCIES ..... A-2
A.2.2 STATE AGENCIES ..... A-2
A.2.3 REGIONAL RESPONSE TEAM (RRT) AND AREA COMMITTEES (ACs) ..... A-3
A.2.4 LOCAL STAKEHOLDERS ..... A-3

**A.3 AREA COMMITTEE MEMBER AND STAKEHOLDER EDUCATION ..... A-3**
A.3.1 INVOLVEMENT IN PRE-APPROVAL PROCESS ..... A-3
A.3.2 PARTICIPATION IN TRAINING AND EXERCISES ..... A-3

**A.4 COMMUNITY NOTIFICATION AND EDUCATION ..... A-4**
A.4.1 PRESS RELEASES AND PRESS CONFERENCES ..... A-4
A.4.2 COMMUNITY OUTREACH/TOWN MEETINGS ..... A-4
A.4.3 MARINE AND AIR ADVISORIES ..... A-5

**APPENDIX B LESSONS LEARNED AT GALVESTON ISB EXERCISES ..... B-1**

**B.1 ORGANIZATIONAL ..... B-1**

**B.2 CONTRACTING ..... B-1**

**B.3 AIR OPERATIONS ..... B-1**

**B.4 SURFACE OPERATIONS ..... B-1**

**B.5 TRAINING ..... B-2**

**B.6 TYPICAL RESPONSE TIMES ..... B-3**

**APPENDIX C FIRE-RESISTANT BOOM BY MANUFACTURER ..... C-1**

**C.1 AMERICAN MARINE FIREBOOM ..... C-1**
C.1.1 SUMMARY OF TESTING ..... C-2
C.1.2 MANUFACTURER INFORMATION ..... C-2

**C.2 AUTO BOOM FIRE MODEL ..... C-3**
C.2.1 SUMMARY OF TESTING ..... C-4
C.2.2 MANUFACTURER INFORMATION ..... C-4

**C.3 HYDRO-FIRE BOOM ..... C-5**
C.3.1 SUMMARY OF TESTING ..... C-6
C.3.2 MANUFACTURER INFORMATION ..... C-6

**C.4 POCKETBOOM ..... C-7**
C.4.1 SUMMARY OF TESTING ..... C-8
C.4.2 MANUFACTURER INFORMATION ..... C-8

**C.5 PYROBOOM ..... C-9**
C.5.1 SUMMARY OF TESTING ..... C-10
C.5.2 MANUFACTURER INFORMATION ..... C-10

**C.6 SEACURTAIN FIREGARD ..... C-11**
C.6.1 SUMMARY OF TESTING ..... C-12
C.6.2 MANUFACTURER INFORMATION ..... C-12

**C.7 WATER-COOLED FIRE BOOM ..... C-13**
C.7.1 SUMMARY OF TESTING ..... C-14
C.7.2 MANUFACTURER INFORMATION ..... C-14

**APPENDIX D CALCULATIONS ..... D-1**

**D.1 OIL SURFACE AREA ESTIMATION ..... D-1**

**D.2 BURN VOLUME CALCULATIONS ..... D-1**

**D.3 ENCOUNTER RATES ..... D-3**

**APPENDIX E IGNITION DEVICES ..... E-1**

**E.1 SUMMARY DESCRIPTION OF COMMERCIALLY AVAILABLE DEVICES ..... E-1**
E.1.1 HELI-TORCH IGNITION SYSTEM ..... E-1
E.1.1.1 Manufacturer Information ..... E-2
E.1.2 SIMPLEX MODEL 901 HANDHELD IGNITER ..... E-2
E.1.2.1 Manufacturer Information ..... E-3
E.1.3 ESSM FLARE-TYPE IGNITER ..... E-3
E.1.3.1 Manufacturer Information ..... E-3
E.1.3.2 Additional Information ..... E-3
E.1.4 DOME IGNITER ..... E-4
E.1.4.1 Manufacturer Information ..... E-4

**APPENDIX F ENVIRONMENTAL EFFECTS OF OIL ..... F-1**

**F.1 OIL SLICKS AND OIL STRANDED ON SHORES ..... F-1**

**F.2 WATER-COLUMN AND SEABED EFFECTS ..... F-2**

**APPENDIX G HELI-TORCH: SAFE OPERATING PROCEDURES, HELICOPTER AND TRAINING REQUIREMENTS ..... G-1**

**G.1 SCOPE ..... G-1**

**G.2 SAFE OPERATING PROCEDURES – FUEL MIXING AND HANDLING ..... G-1**

**G.3 SAFE OPERATING PROCEDURES – IGNITER OPERATIONS ..... G-3**

**G.4 HELICOPTER AND OPERATING COMPANY REQUIREMENTS ..... G-4**
G.4.1 HELICOPTER REQUIREMENTS ..... G-4
G.4.2 REQUIRED CERTIFICATIONS ..... G-5

**G.5 TRAINING REQUIREMENTS ..... G-5**

**APPENDIX H SPECIAL MONITORING OF APPLIED RESPONSE TECHNOLOGIES (SMART) ..... H-1**

**H.1 SMART IS A GUIDANCE DOCUMENT ONLY ..... H-1**
H.1.1 PURPOSE AND USE OF THIS GUIDANCE: ..... H-1

**H.2 INTRODUCTION ..... H-2**
H.2.1 GENERAL INFORMATION ON SMART MODULES ..... H-2
H.2.1.1 General Considerations and Assumptions ..... H-2

**H.3 MONITORING IN-SITU BURNING OPERATIONS ..... H-3**
H.3.1 BACKGROUND ..... H-3
H.3.1.1 Mission Statement ..... H-3
H.3.1.2 Overview of In-situ Burning ..... H-3
H.3.2 MONITORING PROCEDURES ..... H-4
H.3.2.1 General Considerations ..... H-4
H.3.2.2 Sampling and Reporting ..... H-4
H.3.2.3 Monitoring Locations ..... H-5
H.3.2.4 Level of Concern ..... H-5
H.3.2.5 SMART as Part of the ICS Organization ..... H-6
H.3.2.6 Information Flow and Data Handling ..... H-6

**H.4 SMART RESOURCES ..... H-6**

**APPENDIX I VESSEL BURNING - *NEW CARISSA* LESSONS LEARNED ..... I-1**

**APPENDIX J CONVERSION TABLES ..... J-1**

# LIST OF FIGURES

Figure 1. ISB Operation with Fire-resistant Boom ..... 2
Figure 2. Flowchart of ISB Decision-Making Process ..... 8
Figure 3. Aerial Oil Slick Thickness and Volume Estimator ..... 25
Figure 4. Offshore Oil Spill Weathering Prediction ..... 26
Figure 5. Funnel Boom—Wide V-shaped, Open Apex Operation ..... 39
Figure 6. Heli-torch and Fire-resistant Boom Test ..... 41
Figure 7. Representative Response Organization of ISB Functions. ..... 64
Figure 8. Mounting Configuration of Heli-torch to Helicopter ..... 71
Figure 9. Continuous Burning Using Tow Boats ..... 75
Figure 10. Independent Task Force Operational Procedure ..... 76
Figure 11. Coordinated Task Force Operational Procedure ..... 77
Figure 12. J-release Technique into Fire-resistant Boom ..... 78
Figure 13. Towline Release Technique ..... 79
Figure 14. Burning an Uncontained Oil Slick ..... 81
Figure 15. Deflection Boom Angle ..... 82

Figure C-1. American Marine Fireboom Design ..... C-1
Figure C-2. American Marine Fireboom During Burn ..... C-1
Figure C-3. Auto Boom Fire Model ..... C-3
Figure C-4. Auto Boom Fire Model During Burn ..... C-3
Figure C-5. Hydro-Fire Boom ..... C-5
Figure C-6. Hydro-Fire Boom During Burn ..... C-5
Figure C-7. Pocketboom ..... C-7
Figure C-8. Pocketboom During Burn ..... C-7
Figure C-9. PyroBoom ..... C-9
Figure C-10. PyroBoom During Burn ..... C-9
Figure C-11. SeaCurtain FireGard ..... C-11
Figure C-12. SeaCurtain FireGard During Burn ..... C-12
Figure C-13. Water-Cooled Fire Boom ..... C-13
Figure C-14. Water-Cooled Fire Boom During Burn ..... C-14

Figure D-1. Calculate Slick/Burn Area, U-Shaped Boom ..... D-1

Figure E-1. Simplex Handheld Flare Igniter (Fingas and Punt, 2001) ..... E-2
Figure E-2. Dome Igniter ..... E-4

Figure G-1. Grounding Procedures for Mixing Heli-torch Fuel ..... G-1
Figure G-2. Typical Heli-torch Fuel Mixing and Landing Area ..... G-2

Figure I-1. *NEW CARISSA* Assisted Burn Operation ..... I-1

# LIST OF TABLES

Table 1. Quick Reference Guide - Manual Organization *(Hyperlinks)* ..... 4
Table 2. Oil Types .....11
Table 3. Evaporation and Dispersion Chart .....12
Table 4. Emulsification Chart .....13
Table 5. Weather Effects.....14
Table 6. Key ISB Risks and Mitigative Measures .....21
Table 7. Minimum Ignitable Thickness .....29
Table 8. Burn/Removal Rates for Large Fires.....29
Table 9. Fire Extinguishing Slick Thickness.....30
Table 10. Wind Drift of Oil.....32
Table 11. Desirable Boom Attributes .....40
Table 12. Minimum Vessel Requirements for Offshore ISB Operations .....45
Table 13. Representative Helicopter Data.....47
Table 14. Safe Working Distances from the Fire .....54
Table 15. Estimates for Maximum Downwind Extent of PM-10 Particulates* .....59

Table B-1 Typical ISB Response Times/Vessel Speed by Function.....B-3

Table C-1. American Marine Fireboom Dimensions .....C-2
Table C-2. Auto Boom Fire Model Dimensions .....C-4
Table C-3. Hydro-Fire Boom Dimensions .....C-6
Table C-4. Pocketboom Dimensions.....C-8
Table C-5. PyroBoom Dimensions .....C-10
Table C-6. SeaCurtain FireGard Dimensions .....C-12
Table C-7. Water-Cooled Fire Boom Dimensions.....C-13

Table D-1. Burn/Removal Rates for Large Fires..... D-2

Table E- 1. Heli-torch Dimensions .....E-1
Table E-2. Simplex Handheld Igniter Model 901 Dimensions .....E-3
Table E-3. ESSM Flair-type Igniter Dimensions.....E-3
Table E-4. Dome Igniter Dimensions .....E-4

# LIST OF ABBREVIATIONS AND ACRONYMS

| | |
|---|---|
| A | Area |
| AC | Area Committee |
| ACP | Area Contingency Plan |
| API | American Petroleum Institute |
| ASA | Applied Science Associates |
| ASTM | American Society for Testing and Materials |
| BNTM | Broadcast Notices to Mariners |
| BR | burn rate |
| bbl/hr | barrels per hour |
| b/w | buoyancy to weight |
| CD | compact disk |
| CDC | Centers for Disease Control and Prevention |
| COTP | Captain of the Port |
| CPP | controllable pitch propeller |
| DOC | Department of Commerce |
| DOI | Department of the Interior |
| DOPS | Dracone Offloading Pumping System |
| DSS | Decision Support System |
| Eff | Sweep system oil containment efficiency |
| FAA | Federal Aviation Administration |
| FAR | Federal Acquisition Regulation |
| FOSC | Federal On-Scene Coordinator |
| $ft^2$ | square feet |
| $ft^3/ft$ | cubic feet per foot |
| $g/cm^3$ | gram per cubic centimeter |
| g/mL | gram per milliliter |
| gpm | gallons per minute |
| GPS | Global Positioning System |
| Hr | hour |
| Hp | horsepower |
| IAP | Incident Action Plan |
| ICP | Incident Command Post |
| ICS | Incident Command System |
| ICS/UC | Incident Command System/Unified Command |
| IR | Infrared |
| ISB | In-situ burning |
| lb/ft | pounds per foot |
| LOA | Letter of Agreement |
| LOC | Level of Concern |
| m/s | meters per second |
| Mi | Mile |
| MISLE | Marine Information for Safety and Law Enforcement |

# LIST OF ABBREVIATIONS AND ACRONYMS (cont'd)

| | |
|---|---|
| mm | millimeter |
| mm/min | millimeter per minute |
| mph | miles per hour |
| MOU | Memorandum of Understanding |
| MSRC | Marine Spill Response Corporation |
| NAAQS | National Ambient Air Quality Standard |
| NCP | National Contingency Plan |
| NIIMS | National Interagency Incident Management System |
| NIST | National Institute of Standards Technology |
| NRC | National Response Center |
| NRT | National Response Team |
| nm | nautical miles |
| NOAA | National Oceanic and Atmospheric Administration |
| NOBE | Newfoundland Offshore Burn Experiment |
| OCR | Oil Containment Rate |
| OER | Oil Encounter Rate |
| OHMSETT | Oil and Hazardous Materials Simulated Environmental Test Tank |
| OHMT | Office of Hazardous Materials Transportation |
| OPA 90 | Oil Pollution Act of 1990 |
| OilTh | average oil thickness |
| OR | oil removed by burning |
| ORM | operational risk management |
| $OSC^2$ | On-Scene Command and Control decision support system |
| PAH | polyaromatic hydrocarbon |
| PFD | personal flotation device |
| PM | particulate matter |
| PPE | Personal protective equipment |
| PREP | Preparedness for Response Exercise Program |
| psi | pounds per square inch |
| PVC | polyvinyl chloride |
| R&D | Research and Development |
| RCP | Regional Contingency Plan |
| RRT | Regional Response Team |
| SMART | Special Monitoring of Applied Response Technologies |
| SOA | speed of advance |
| SORS | Spilled Oil Recovery System |
| SSC | Scientific Support Coordinator |
| SSHP | Site Safety and Health Plan |
| SSP | Site Safety Plan |
| SW | sweep width |
| T | time |
| TWA | time-weighted average |

# LIST OF ABBREVIATIONS AND ACRONYMS (cont'd)

| | |
|---|---|
| UAV | unmanned aerial vehicle |
| UMIB | Urgent Marine Information Broadcast |
| USCG | U.S. Coast Guard |
| UHF | ultra-high frequency |
| USEPA | U.S. Environmental Protection Agency |
| VDC | Volt direct current |
| VHF | very high frequency |
| VOC | volatile organic compounds |
| $\mu g/m^3$ | microgram per cubic meter |

# 1. INTRODUCTION

This In-Situ Burn Operations Manual is intended for use by the Federal On-Scene Coordinator (FOSC), spill managers, responding field units, and contingency planners. It is a collection of operational procedures, rules of thumb, and checklists that provide quick access to critical information to assist responders in successfully conducting an effective and safe in-situ burning (ISB) operation. Supporting information and references are also provided to assist with the planning and decision-making processes. It is assumed that the user is familiar with basic oil spill response procedures and equipment, and has a general understanding of spill response organizations within the United States.

This manual addresses only ISB of oil on open water in the offshore environment over three nautical miles from land. It does not address burning on land, in rivers, in near-shore or ice-covered waters. The manual focuses on organizations, procedures, and equipment that are inherent or readily available in the United States and its territories.

The U.S. Coast Guard (USCG) presents this information for voluntary government and public use. It is not a substitute for training, qualified technical advice, and common sense. Since there are complex issues associated with ISB, personnel experienced in the technology should be consulted, and well-trained staff should be on site. It is essential that ISB trained personnel be on site to ensure an efficient and safe operation. This manual does not present USCG policy, and neither the U.S. Government nor the authors shall be held liable for injury, loss, or damage incurred by use of this manual. Mention of trade names of commercial products does not constitute an endorsement or recommendation of their use by the U.S. Government or the authors.

## 1.1 OBJECTIVE

The objective of this operations manual is to provide a tool for operational commanders, field units, and planning staffs to help them determine if and how ISB can be used for a given scenario. The manual provides a user with the information and methods to determine quickly if ISB is a viable response technique for their particular situation, and offers insight into how to conduct an effective burn operation. The manual addresses only proven strategies, tactics, and equipment that have been successfully demonstrated during ISB and other spill exercises and operations. It does not address unproven methods or prototype equipment that are undergoing tests or evaluations.

## 1.2 BACKGROUND

When an oil spill occurs in the marine environment, many response technologies are available to contain and remove the pollutant before serious environmental damage occurs. Although ISB has been a proven option for spill response for many years, it has seldom been used for a variety of reasons including the lack of resources, experience, and information. For ISB to be a truly viable option, planning, special equipment and training specific to ISB must be in place before the limited "window-of-opportunity" presents itself during a spill. Regional Response Teams

(RRTs) and local governmental agencies can establish pre-approved ISB zones to overcome some of these hurdles. Confidence issues in the somewhat intimidating fire-based response need to be addressed. The resulting smoke plume is very visible and raises concerns about public safety and the possible introduction of air pollutants. These information-based and administrative stumbling blocks and ISB biases will be more easily overcome with the proper use of this operations manual.

## 1.3 WHAT IS ISB?

In-situ burning is the controlled burning of an oil spill on the water surface. Specialized fire-resistant boom is required to contain the oil and thicken it for effective burning to occur (Figure 1). Once contained, the oil is ignited using an incendiary device deployed from a helicopter or boat. Burning oil generates so much heat that a traditional containment boom will melt and allow contained oil to escape, spread out and, therefore, stop burning.

To be effective, the burn must attain a steady state so most of the oil burns off. This requires several conditions to be met, some of which are controllable by the response team. As time progresses, the oil becomes more difficult to burn because water mixes with the oil (emulsification) and volatile components are lost through evaporation. Consequently, the sooner oil is contained, the easier it is to burn it.

Figure 1. ISB operation with fire-resistant boom.

## 1.4 WHY CONSIDER ISB

ISB technology offers the following major benefits for superior response to large oil spills in open water:

- Efficient and quick removal of large volumes of oil from the marine environment
- Fewer logistic and personnel requirements than mechanical recovery methods
- Prevention of oil from affecting shorelines, where cleanup is slower and more costly, and the environment is more fragile
- Useful in situations where other options are not feasible (e.g., when there is too much oil to remove from the water through mechanical means, and for spills in very shallow water.)
- More cost effective than most other removal methods
- Provision of another option if sufficient storage is not available to use mechanical removal

In-situ burning (ISB) technology provides a cost-effective alternative to mechanical recovery by eliminating or greatly reducing the huge recovery, transport, disposal, and decontamination effort. Only a small burn residue, approximately five percent or less of the initial oil volume, remains for removal. ISB can also quickly remove large volumes of oil from the water before it reaches land compared to much slower mechanical recovery techniques with their associated logistics difficulties. Dispersants may also provide this benefit in some situations and should also be considered. Each technology has its benefits and liabilities. There is a time and a place for each response technology, and multiple strategies and tactics can be used effectively with each other. More response choices available to the Federal on-scene coordinator (FOSC) improve the probability of success for the spill response. ISB is a viable, cost-effective strategy that is feasible under certain scenarios and conditions. It is one of many tools available to responders. This manual will help determine when ISB is appropriate and how to successfully implement it.

## 1.5 MANUAL ORGANIZATION

The Decision Guide is provided in Chapter 2 for quick assessments in determining if and how ISB technology may be used for the response operation at hand. Chapters 3 through 6 and the Appendices are provided to supplement Chapter 2 with supporting information and more operational guidance when required. The first two appendices are of particular importance to assist with planning an ISB operation. Political and procedural considerations are provided in more detail in Appendix A. Lessons learned at three USCG-sponsored ISB exercises off Galveston, Texas are provided in Appendix B. First-time ISB technology users should review the entire manual before the operation is planned and conducted, while the experienced user can use Chapter 2 with occasional reference to the other chapters as required.

Table 1, a summary of the manual, is provided to assist the user in quickly finding desired information. When using an electronic version of this document, clicking on the blue hyperlinks with the left mouse button will move the user directly to those sections. Hyperlinks are also provided on the page numbers of the Table of Contents and Lists of Figures and Tables.

Table 1. Quick Reference Guide - Manual Organization. *(Hyperlinks)*


| Chapter | Page |
|---|---|
| **2. Decision Guide** | **6** |
| Information Required | **6** |
| Decision Process Checklists Flowchart | **7** |
| **3. Feasibility Considerations** | **24** |
| Source Conditions | **24** |
| Oil Properties/Conditions | **25** |
| Weather and Environmental Conditions | **30** |
| Trajectory | **33** |
| **4. Equipment** | **35** |
| Containment | **35** |
| Igniters | **40** |
| Vessels | **44** |
| Aircraft | **46** |
| Recovery Equipment, Skimmers | **48** |
| **5. Safety and Risk** | **50** |
| Environmental Impacts | **50** |
| Response Personnel | **52** |
| Public Health and Safety | **57** |
| Sampling/Monitoring Equipment (SMART) | **61** |
| **6. Burn Operations** | **63** |
| Organization | **63** |
| Communications | **65** |
| Decision Support Systems | **68** |
| Mobilization | **69** |
| Oil Collection | **72** |
| Ignition Procedures | **73** |
| Burn Procedures | **74** |
| Other Oil Consolidation Tactics | **81** |
| Post-Burn Analysis | **82** |
| Burn Residue | **84** |
| Equipment Cleanup | **85** |
| **References and Resources** | **R-1** |
| Traditional | **R-1** |
| Internet Links | **R-2** |

| Chapter | Page |
|---|---|
| **Appendices** | |
| A Political and Procedural Considerations | **A-1** |
| B Lessons Learned at Galveston ISB Exercises | **B-1** |
| C Fire-resistant Boom by Manufacturer | **C-1** |
| D Calculations | **D-1** |
| E Ignition Devices | **E-1** |
| F Environmental Effects of Oil | **F-1** |
| G Heli-torch Operations and Requirements | **G-1** |
| H Air Monitoring (SMART) | **H-1** |
| I Vessel Burning - *NEW CARISSA* Lessons Learned | **I-1** |
| J Conversions Tables | **J-1** |

# 2. DECISION GUIDE

This chapter is intended to serve as a reference for experienced users in quickly assessing the feasibility of burning and preparing for the burn. Detailed background information and additional operational guidance on the decision-making process are contained in subsequent chapters.

## 2.1 INFORMATION REQUIRED

In planning an ISB operation, there will be three main information requirements:

- Information required to determine burn feasibility and to secure approval
- Inventory of available equipment and personnel
- Information for prediction of health risks and environmental effects

### 2.1.1 Overall Checklists for Experienced Users

#### 2.1.1.1 Pre-spill Planning List

Information requirements that should be addressed prior to a spill include:

- Familiarity with the ISB decision tool
- Influence of key variables
- Likely time windows for key oils
- Equipment/personnel information:
  - Locations
  - Transportation times (loading, transit, and deployment requirements) for fire-resistant boom, conventional boom, ignition systems, and logistics platforms
  - Contact information for smoke plume modeling, weather forecasts, and approval procedures
  - Availability of qualified response personnel

#### 2.1.1.2 Real-time Surveillance Objectives

Spill characterization for the feasibility determination, approvals process, operational plan, and site safety plan require the following information:

- Spill size and nature of release
- Oil type
- Oil weathering
- Status of spill (terminated, ongoing)

- Status of other response efforts
- Current and forecast weather and sea conditions

Potential areas for burn/no-burn zones are determined with the following information:

- Detailed characterization of slick (size, location, thickness)
- Spill location and proximity to potential affected coastal areas

#### 2.1.1.3 Ongoing Information Requirements

Surveillance and feedback to the operational command on slick conditions regarding effective containment and safety should include:

- Location of slicks for containment
- Location of slicks to avoid to prevent unintentional fires
- Validation and feedback on burn/no-burn zones
- Location of fishing areas, shipping lanes, drilling rigs, pipelines, and other offshore facilities

Validation of operational effectiveness, smoke plume predictions, and monitoring of unburned oil.

- Burn location
- Estimation of burn area and time period of burn(s)
- Monitoring of unburned or burning oil escaping containment area

## 2.2 DECISION PROCESS CHECKLISTS FLOWCHART

The process of deciding whether or not to use ISB for a given spill situation is summarized in Figure 2. The flowchart is comprised of the five questions that must be answered affirmatively to justify the use of ISB for a marine oil spill. Sub-components for these five questions are provided in the remainder of Chapter 2, and additional detail on each one is provided in Chapters 3 through 6.

### 2.2.1 Information Evaluation

#### 2.2.1.1 Overview of Decision-making Process

The decision on whether or not ISB is a justifiable response alternative for a given spill will center on the following issues:

- Is it feasible to burn the oil?
- Can the necessary approvals be obtained?
- Can the specialized equipment and qualified personnel be assembled to mount a successful operation?
- Are adverse health and environmental effects avoidable or, if not, can they be accepted?

Each of these questions includes sub-components as well as an element of timeliness.

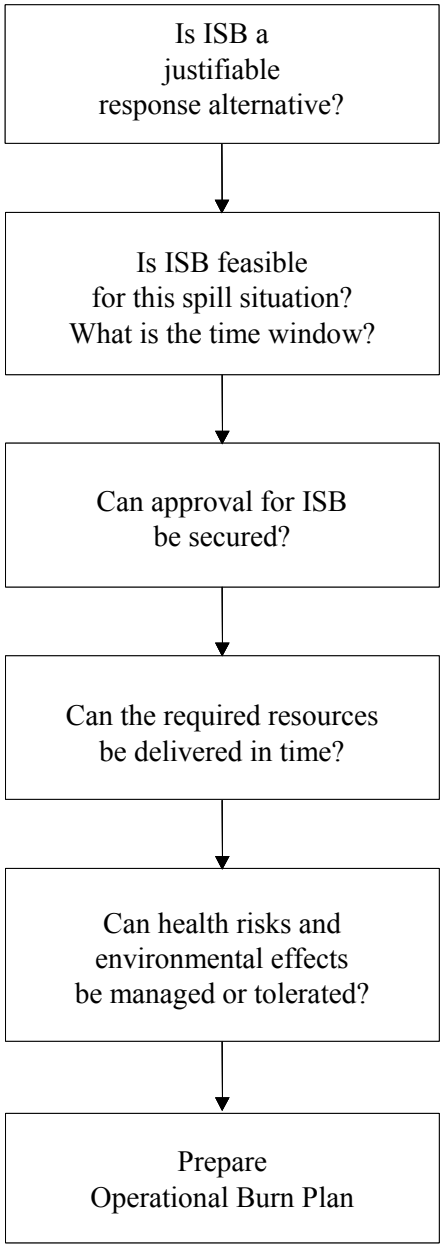


Figure 2. Flowchart of ISB decision-making process.

#### 2.2.1.2 Determination of Time-Line

The success of an ISB operation will, in most cases, be a race against time for two main reasons. Emulsification of the oil will make it difficult to ignite and burn, and spreading of the slick will make it difficult to create a burnable thickness

One of the initial tasks in the decision-making process will be an assessment of the likely time-line for the burn. This will involve a comparison of the following:

- The time available for initiating a successful operation, taking into consideration the oil condition, weather and sea conditions, time until nightfall, and proximity to shorelines or threatened resources
- The time required to assemble and transport the resources needed to contain and ignite the oil, implement a surveillance operation, and carry out any necessary measures to mitigate health and environmental effects

### 2.2.2 Rationale for ISB

Responsible parties and responders may be reluctant to consider using ISB due to both the lack of familiarity with the technique and safety issues. For the same reasons, regulatory agencies may be reluctant to approve its use. A solid understanding of the reasons for using ISB will overcome these obstacles during pre-spill planning and at the time of the spill.

In the past, the most commonly used technique for responding to large marine oil spills has been containment and recovery. The main factor that should be emphasized is a realistic assessment of the likely effectiveness of available alternatives: (1) ISB, (2) containment and recovery, and (3) dispersant application for a given spill situation. Specifically, which of the three options provides the greater likelihood of success depends upon consideration of the following conditions:

- Current and predicted oil volume and its condition
- Present and predicted weather and sea conditions
- Water depth and distance to shore
- Availability of equipment and personnel to carry out each alternative

In considering these factors, it is critical that the assessment be realistic as to its potential for success in the event of changes in weather and equipment breakdowns. Perhaps the greatest single advantage of ISB is that of speed: a significant portion of the spill can be removed in a short time, avoiding problems in the response due to changing conditions.

#### 2.2.2.1 Is ISB Justified?

In most cases, the benefits of removing the oil from the water's surface greatly outweigh the short-lived effects of the smoke and the localized effects of the burn residue, justifying burning on environmental impact grounds. The main exception to this would be when slicks are close to land, which would present a risk of creating secondary fires, and the possibility that a smoke

plume would have adverse effects downwind in populated areas The environmental effects of smoke, residue, and unburned oil are discussed in detail in Section 5.1.

#### 2.2.2.2 Likelihood of Success

Evaluating the likelihood of success using ISB will involve an assessment of:

- Feasibility of igniting the oil and sustaining combustion
- Likelihood of securing the required approvals
- Capability to assemble the required equipment and manpower in a timely manner
- Ability to manage the various risk factors

Tools and guidelines for assessing these factors are provided below.

### 2.2.3 Feasibility Decision Tool

This section provides a Decision Tool that summarizes the main effects of evaporation, dispersion, emulsification, and weather on the feasibility of a burn. The charts provided are intended as aids in making a rapid assessment of the feasibility of a burn. The process includes five steps to evaluate oil conditions and predict the behavior of the oil. In Tables 3-5, green represents a favorable condition for the given decision factor, yellow indicates a marginal condition, and red indicates an unfavorable condition. The transition areas of the tables where blocks change color within an oil group should be considered as a gradual change to adjacent blocks.

**Step 1: Characterize the Oil.**

Characterizing the oil and assessing its condition are essential to the decision-making process. The Oil Pollution Act of 1990 (OPA 90) regulations provide a classification scheme, shown in Table 2, that divides oils into five major groups based on the American Petroleum Institute (API) system of specific gravity.

Group V oils, having a specific gravity greater than fresh water, will either sink or be neutrally buoyant, and will usually not be candidates for in-situ burning. If Group V is found floating, the Group IV oil characteristics can be used to approximate its burning properties.

Table 2. Oil types.

| GROUP NO.* | SPECIFIC GRAVITY (API) | COMMON EXAMPLES | CHARACTERISTICS |
|---|---|---|---|
| I** | Generally < 0.80 (Generally > 45) | Jet fuels, gasoline, light kerosenes (i.e., JP-8), gas condensate | Very volatile and highly flammable<br>High rates of evaporation & dispersion<br>Rapid spreading rates<br>Little emulsification |
| II | < 0.85 (> 35) | Diesel fuels, No. 2 fuel oil, light crudes (i.e., High Island, Light Louisiana Sweet, Northstar), heavy kerosenes (i.e., JP-5) | Moderate volatility<br>Low to moderate viscosity<br>Can form stable emulsions after considerable evaporation |
| III | ≥ 0.85 to < 0.95 (35 to 17) | Medium crudes (Arabian light, Arabian heavy, Alaska North Slope, Drift River, Carpinteria, West Delta, etc.) | Moderate volatility<br>Moderate viscosity<br>Can form stable emulsions immediately or after some evaporation |
| IV | ≥ 0.95 to ≤ 1.0 (17 to 10) | Heavy crude oils (i.e., Mandalay, Merey, Santa Ynez), No. 6. fuel oil, Bunker C | Moderate volatility<br>Moderate to high viscosity<br>Can form stable emulsions immediately |
| V | >1.0 (< 10) | LAPIOs (i.e., bitumens) *heavier than fresh water* | Very low volatility<br>Little evaporation<br>Weathers very slowly<br>Very low acute toxicity<br>Can form stable emulsions immediately |

* Groupings adapted from 33 CFR 155.1020.
** Group I oils are classified according to their volatility rather than their gravity and are deemed to be non-persistent.

**Step 2: Assess Evaporation and Dispersion.**

Use the oil group number, wind speed, and time in hours since the spill occurred (including forecast time for equipment to be deployed on-scene) to predict the feasibility of burning based on evaporation and dispersion effects.

Table 3. Evaporation and dispersion chart.

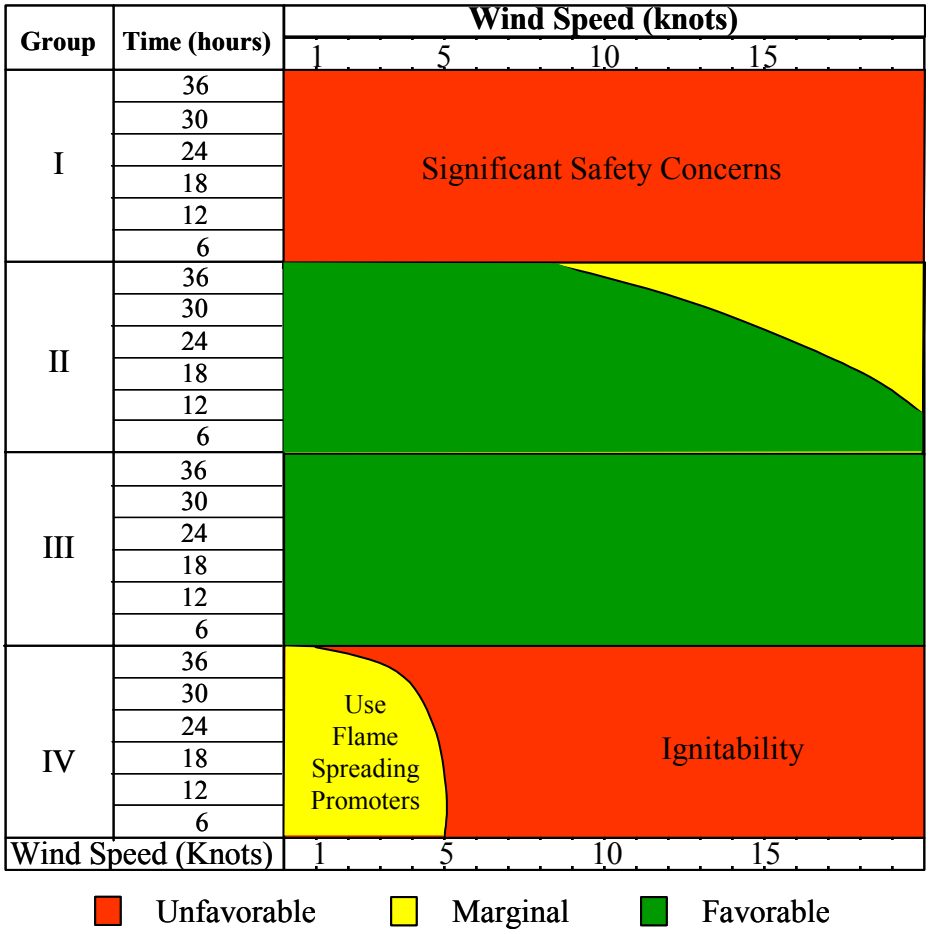


*Note: Group I oils should not be deliberately ignited due to safety concerns; however, where accidental ignition occurs, safety and environmental impact issues must be considered to determine if the burn should be allowed to continue. In some cases, it may be appropriate to allow the oil to burn off.

Group I oils are not good candidates for burning because of the presence of volatile vapors and the associated risk of flashback. Group I oils also evaporate and disperse so readily that ISB would generally not be warranted. Evaporation and dispersion effects will generally not be a limiting factor for burning Group II and III oils within the first 36 hours. Except under relatively calm conditions, Group IV oils will be difficult to ignite and burn because their lack of volatile components inhibits flame spreading. In low winds, it may be possible to burn these oils by using combustion promoters to assist in flame spreading.

**Step 3: Assess Emulsification.**

The rate of emulsification will depend on the oil type, its degree of weathering, and the sea conditions. Use Table 4, which summarizes these factors using the oil type, wind speed, and time from the start of the spill to the start of the proposed burn.

Table 4. Emulsification chart.

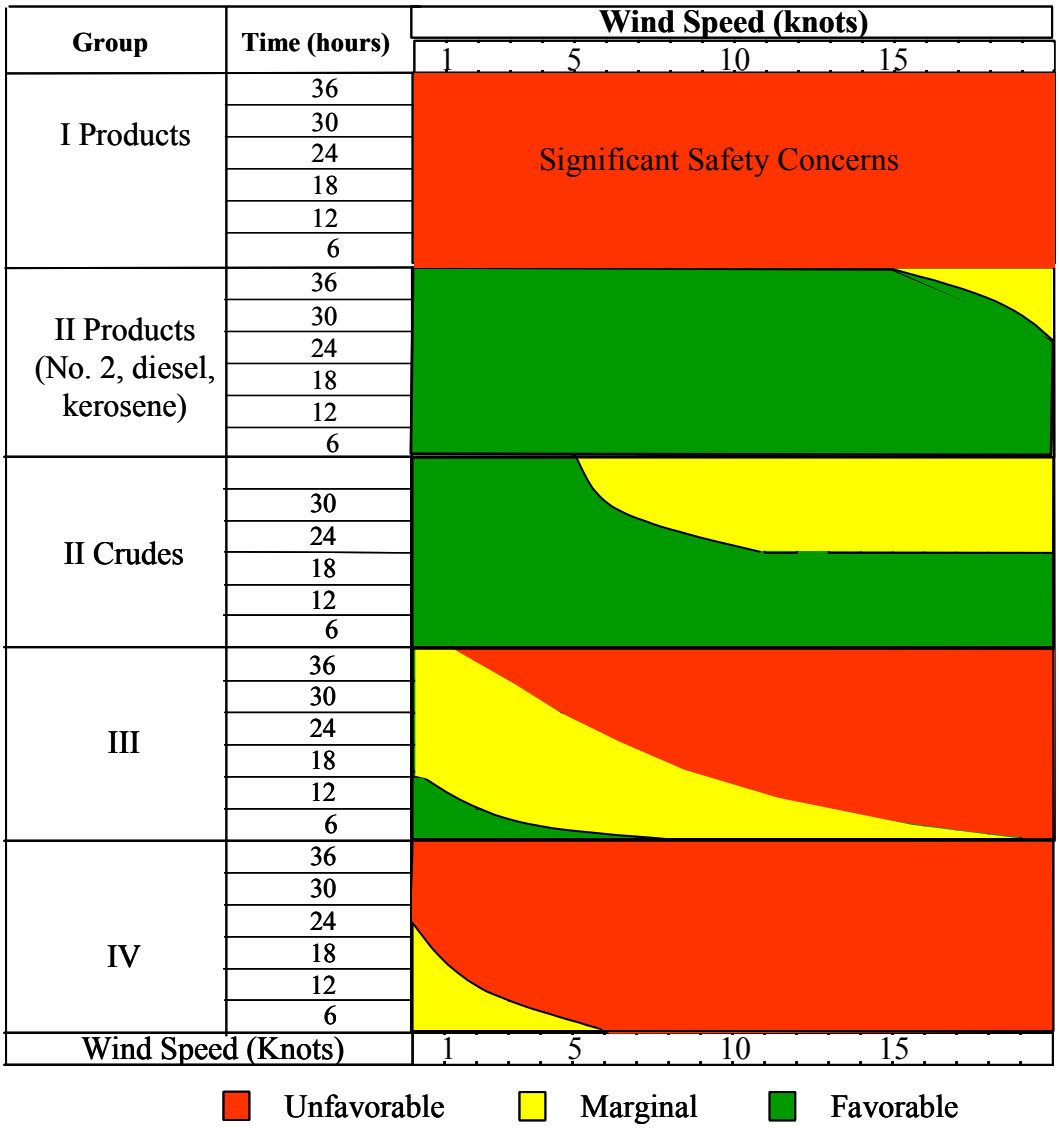


Note that Group I oils are not listed because of the safety concerns described previously in Step 2. Group II refined products do not emulsify, but Group II crudes may emulsify after 24 to 36 hours. Most crude oils (Group III) readily emulsify once they have weathered, which means there will be a limited time window of about 24 hours or less, depending on wind conditions. Group IV oils are difficult to ignite once they have emulsified even moderately, making them unburnable except for a very limited time under calm conditions.

**Step 4: Assess Weather and Sea Conditions.**

Ignition is difficult in high winds and rough sea conditions, which can preclude effective containment of the oil (Table 5). Short-crested seas will affect containment much more than long-period swells of the same wave height. It is important that the conditions be acceptable not only at the start of the burn, but also for the estimated duration of the burn.

Table 5. Weather effects.

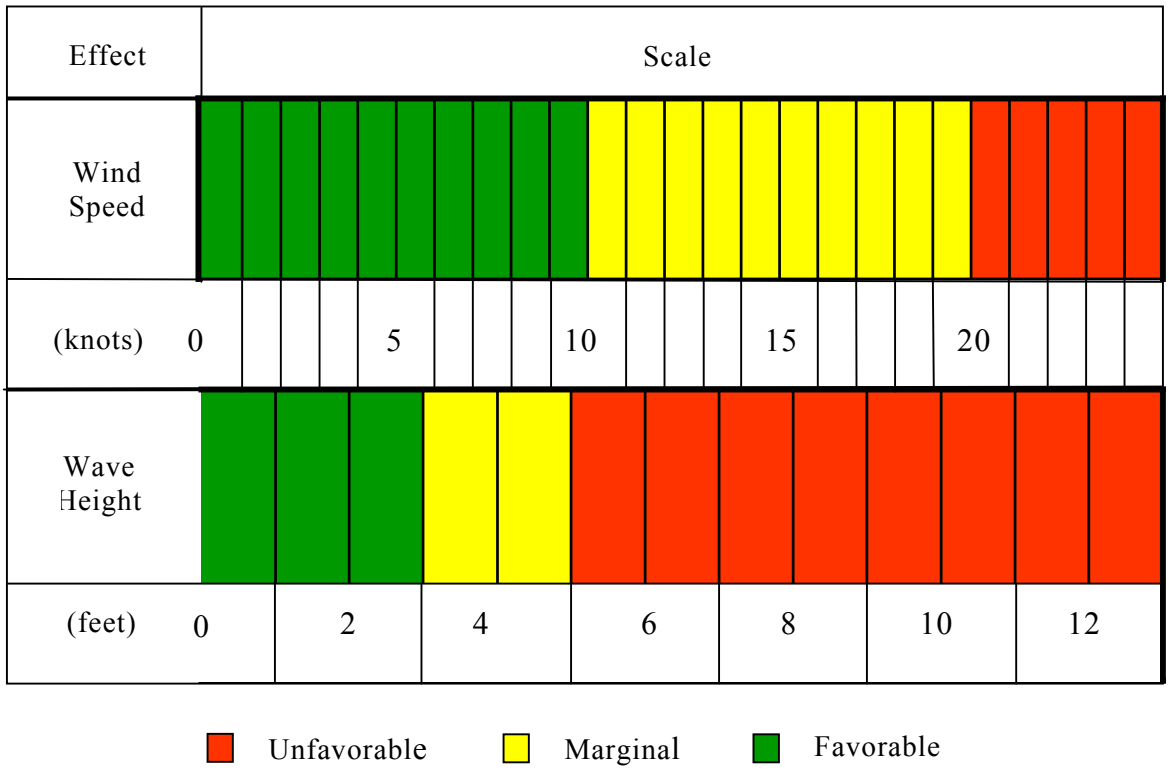


**Step 5: Make Final Decision.**

The four-step procedure described above is intended to simplify assessment of a wide range of possible variables, and may not apply to every situation. When time permits, the National Oceanic and Atmospheric Administration (NOAA) or other scientific advisors with access to oil weathering and smoke plume models should be consulted before proceeding with ISB. The smoke plume generated by ISB is usually the public's biggest concern and this should be addressed from environmental impact, safety, and public perception perspectives. Plume modeling efforts, however, should not delay a burn when it is executed a reasonable distance (greater than 4 miles in most cases) from populated areas (see Section 5.3). In some situations Type II crude oil and refined products can be burned more than 36 hours after the initial spill. Continuous and intermittent spills expand the window of opportunity for burning.

Use the results of the four-step procedure and consider the following: to make a final decision:

- If most of the results were green and none were red, the conditions are favorable for ISB.
- If most of the results were yellow and none were red, conditions are marginal and ISB should be considered if other conditions listed below are ideal.
- If only Step Three is red, try to get more information on the oil. If the oil is not listed in Table 2, consult with the NOAA Scientific Support Coordinator (SSC) for weathering predictions.
- If Step Two or Four are red, ISB is unlikely to be successful.

Other conditions, addressed in this manual, should also be considered before proceeding with an ISB. These include:

- Proximity of the burn site to populated areas, or to an ignitable spill source
- Safety and environmental impacts of the burn operation
- Night, heavy fog, or rain — These conditions could reduce visibility and make ISB unsafe; heavy rain may also prevent ignition
- Availability of ISB equipment, including ocean boom, fire-resistant boom, and ignition equipment
- Availability of personnel with ISB training or experience

### 2.2.4 Approvals

The FOSC can approve use of ISB under subpart J of the National Contingency Plan (NCP). The concurrence of the U.S. Environmental Protection Agency (USEPA) representative on the applicable RRT and the state(s) with jurisdiction over waters threatened by the discharge must be obtained and the Department of Commerce (DOC) and the Department of the Interior (DOI) natural resource trustees must be consulted. While the specific criteria used to establish such zones might differ among regions, the general classification procedure is to identify:

- Pre-approved or pre-authorized areas - the FOSC is authorized to conduct ISB operations, provided certain prescribed criteria are met
- Areas requiring approval on a case-by-case basis
- Exclusion or restricted zones - areas where all ISB activity is prohibited

#### 2.2.4.1 Pre-approval Process

Because of the potential benefits that ISB offers and the need for prompt decisions, the NCP specifically requires that Regional Contingency Plans (RCPs) and Area Contingency Plans (ACPs) include plans and procedures for the pre-authorized use of burning agents. They must also address the specific contexts in which ISB should be considered for use.

Most RRTs have established pre-approved or pre-authorized zones for ISB operations. The pre-approved zones are usually described in Memoranda of Understanding (MOUs), Letters of Agreement (LOAs), or other policy documents that have been prepared under the auspices of a specific RRT and signed by representatives of the federal and state agencies with ISB decision approval or concurrence authority. Because the criteria and protocols differ across the country, the ACP for a particular port area should be consulted for specific direction.

While the specifics differ, most pre-approval agreements include the following elements:

- Affirm the FOSC's authority to use ISB or burning agents without additional approvals or consultations, in order to prevent or substantially reduce the hazard to human life
- Require the FOSC to notify the RRT agencies of his/her decision to use ISB as soon as practicable

- Require use of recognized techniques, such as the use of a fire-resistant boom to contain and control the burn
- Require adherence to health and safety requirements and thresholds during the burn
- Require burning in accordance with Endangered Species Act consultations, and require specific consultation if endangered species are seen in the burn area
- Require air plume monitoring whenever populated areas may be affected
- Require provisions for residue collection
- Require a FOSC-arranged debriefing following an ISB use

#### 2.2.4.2 Case-by-case Approval

In those areas where ISB may be a viable response technique, but where significant concerns exist that need to be addressed prior to the use of ISB, approval must be obtained on a case-by-case basis. An application addressing the concerns and containing specific information and procedures must be prepared and submitted to the applicable RRT prior to approval being granted.

##### *2.2.4.2.1 Process Requirements*

In order to gain approval quickly enough for ISB to be effective, an efficient process that is known and supported by all stakeholders must be in effect. Steps in the process generally include:

- The FOSC contacts the proper agency representatives on the RRT and informs them that a request to use ISB may be forthcoming
- The Incident Command System/Unified Command (ICS/UC) Planning Section investigates the viability of ISB, gathers the necessary information, and completes the appropriate ISB application
- If the FOSC decides that a request for ISB is appropriate, the completed application is submitted and a conference call with necessary RRT representatives is scheduled at the first reasonable opportunity
- A conference call or meeting is conducted, and a decision is made on whether or not to proceed with ISB based on information provided on the FOSC's application and any other sources requested by the RRT
- The ICS/UC Operations Section commences ISB operations if authorization is granted

##### *2.2.4.2.2 Information Needs*

Application information requirements and formats differ among federal regions, but the information requirements usually consist of the following:

- Spill data
- Weather and water conditions at time and location of spill

- Proposed burn plan (including a monitoring plan and site safety and health plan)
- Weather and water condition forecast from time of spill
- Predicted oil behavior
- Resources at risk
- FOSC's evaluation of response options
- FOSC's recommendation regarding ISB

The applicable ACP should be consulted for the specific ISB requirements and application procedures.

#### *2.2.4.2.3 Time required for Approval Process*

The decision to burn should be made within the first several hours following the spill to permit sufficient time to acquire approvals and assemble the personnel and equipment necessary to conduct a burn. If ISB is to be successful, it must typically be undertaken within a small window of opportunity following the release of oil. The window of opportunity for a burn may be less than 24 hours in some cases.

### 2.2.5 Resources

The required resources for burning can be considered in four main categories:

- Primary equipment for containing the oil for burning, and igniting the slick
- Platforms to deliver the equipment to the site, and deploy it once there
- Equipment to ensure safe operations
- Trained personnel to perform all required operations

#### 2.2.5.1 Primary Equipment for In-Situ Burning

The following primary equipment should be available for an ISB operation:

- Fire-resistant boom (typical length of 500 feet per unit)
- Towing gear (non-metallic tow lines, 200 to 500 feet at each end of the boom)
- Ancillary gear (pumps, hoses, filters, etc.) if applicable for actively cooled boom
- Conventional boom for multiple task-force operation (up to 1000 feet per unit)
- Ignition system (Heli-torch, fuel and gelling agent)
- Handheld igniters as backup to Heli-torch or for small spills

#### 2.2.5.2 Logistics - Vessels and Aircraft

Adequate vessels and aircraft should be made available to support the following functions required for an ISB operation.

- Vessels:
  - Boom Towing in U- or V-configuration (two vessels capable of sustained speeds of 0.5 to 0.75 knots and deck space corresponding to boom requirements)
  - Boom/Skimmer Deployment (if applicable for residue recovery; crane for skimmer)
  - Observation (possible communications center for operation)
  - Safety (equipped with fire monitors)
  - Heli-torch support (if applicable; requires helicopter deck, deck-space for fuel mixing)
- Aircraft:
  - Heli-torch operations (helicopter, pilot certified for Heli-torch operations)
  - Spotter aircraft (define burn areas and safety zones, ongoing slick surveillance)
  - Monitoring (assessment of burn operation)

#### 2.2.5.3 Safety Equipment

Safety equipment is essential to an ISB. The following items in sufficient quantity must be available to support an ISB operation:

- Personal protective equipment (PPE) for boom-handling (neoprene gloves, rubber boots, and goggles)
- Heli-torch fuel mixing (goggles, filter masks, gloves, and grounding devices)
- Combustible gas detectors (to confirm safe atmosphere on vessels before ignition)
- Fire-fighting packages (on each vessel involved in operation)
- 150-lb $CO_2$ fire extinguisher (on vessel or at landing pad for Heli-torch operations)
- Spill cleanup kit (for fuel spills related to Heli-torch fuel mixing)
- Decontamination materials (wipes, cleaners, washer, plastic bags, boom, etc.)

#### 2.2.5.4 Personnel Requirements

Personnel must be assigned to the following platforms and sites to maintain multiple shifts, as required:

- Incident Command Post
- Towing vessels
- Command/observation vessel
- Fire-control vessel
- Safety zone vessel(s)
- Burn residue recovery vessel (if required)

- Heli-torch preparation site (three-person ground crew)
- Ignition and observation of aircraft (including Heli-torch, spotter and monitoring; pilot, co-pilot and observer/spotter as applicable)
- Decontamination vessel (aboard towing/recovery vessels and site(s) for ship/boom decontamination)
- Special Monitoring of Applied Response Technologies (SMART) team(s) (if prescribed)

### 2.2.6 Risk

Risk of human safety and environmental impact must be evaluated and managed to safely accomplish the spill response effectively with the limited resources available. This section provides guidance for the Incident Command Post (ICP) and task force(s) for evaluating and managing risk before and during a burn.

#### 2.2.6.1 Risk Management Approach

An overall assessment of the risk should be made to determine if the operation is warranted It is important to continually understand and manage the key risk factors of an ISB operation. The risk factors and conditions affecting them must be identified and monitored before and throughout the operation so that changing risk conditions are identified and addressed appropriately.

ISB operations occur at a fast pace, and there is seldom time to perform formal, detailed risk assessments during operations; however, several factors can significantly increase risk exposure during operations, including the following:

- Complacency during operations
- Failure to account for differences between routine operations and unique operations
- Changing conditions or situations, such as weather, threats, equipment failure, crew fatigue, etc.

One USCG risk management approach would be to apply tactical Operational Risk Management (ORM) concepts to help manage these operational risks (see COMDTINST 3500.3 on ORM for details, Reference Internet link under USCG).

#### 2.2.6.2 Evaluation and Control of Risks

The key risks to be evaluated before and during ISB are:

- Accident during Heli-torch mixing process
- Flashback during ignition
- Risk of secondary or unintentional fires
- Heat from the fire
- Exposure to smoke emissions

- Ability to extinguish an ISB when desired

Some measure of control over the burn area and burn rate is possible, but it may be difficult, if not impossible, to quickly extinguish a large oil fire on the water. **The overriding safety philosophy in preparing for a large-scale burn operation is to assume that once the slick is ignited it cannot be put out until it burns itself out.**

The next two sections identify recommended tasks to be completed before and during the ISB.

##### *2.2.6.2.1 Pre-burn Tasks*

- Prepare the Site Safety Plan (SSP), and fully brief all participants involved in the operation at the start of each day (Sample SSP available at NRT web site link)
- Define safety zone areas: areas which the burn operation must avoid and areas in which the burn can proceed
- Identify and chart the location of the spill source, other ignitable slicks, other response or evacuation efforts, shorelines, sensitive resources, and human habitation
- Estimate the path of the smoke plume in relation to shorelines, sensitive resources, and human habitation
- Monitor for combustible atmosphere on vessels before ignition

##### *2.2.6.2.2 During Burn Tasks*

- Monitor the burn location in relation to other ignitable slicks
- Control the direction of towed operations in relation to the position of other vessel traffic
- Maintain safe distances between vessels, drilling rigs, and other response operations
- Provide feedback for operational control (adjustments to course, tow speed, or recommendation to extinguish the burn)
- Monitor emissions (confirming predicted plume trajectory and emissions levels)
- Monitor slicks that have escaped the boom (burning or not)

#### 2.2.6.3 Mitigative Measures

The following mitigative measures should be completed before beginning the ISB:

- Establish safety zone(s) (consider safe distances, risk of secondary fires, exposure to smoke)
- Develop the Communications Plan with redundancy (assign frequencies to facilitate work group and command communication in accordance with the ICS chain of command)
- Establish safe working practices for vessel operations, igniter operations, and fire control
- Provide dedicated fire-extinguishing and safety tow capability to rescue vessels in distress

### 2.2.7 Operation Plan

#### 2.2.7.1 Command Structure

The command structure for the resources engaged in ISB operations should be clearly laid out in the Incident Action Plan (IAP). The IAP developed and approved for the operational period in which the ISB operations are to be conducted, and may be incorporated into the Operation (or Burn) Plan specifically developed to address ISB operations. If a separate document, the Operation Plan should be clearly referenced in the applicable IAP. Sample IAPs for ISB operations and exercises are available at the USCG Research and Development (R&D) Center web site in the Internet Reference section. Section 6.1 addresses organizational considerations and the command structure in more detail.

#### 2.2.7.2 Surveillance

The surveillance plan must address two main elements; fire-burn decision-making information requirements and monitoring during the burn.

Initial surveillance reports determine the spill characteristics required for making a justifiable decision to burn, and for gaining approval for the burn. Subsequent detailed mapping of the slick is required to establish burn/no-burn zones, and to assist in developing the containment strategy.

During the burn, surveillance is required to assess slick conditions on an ongoing basis and, in particular, to monitor for the presence of thick slicks in the vicinity of the burn. Surveillance is also used to confirm predicted trajectories of the smoke plume and of any unburned oil. Section 4.4 provides detailed information on the aircraft requirements for surveillance.

#### 2.2.7.3 Safety

The Site Safety Plan (SSP) and the establishment of a safety zone must address the four key risks and associated mitigative measures in Table 6. Chapter 5 provides detailed information on safety and risk. Preparation of an SSP is addressed in Section 5.2.1.

Table 6. Key ISB risks and mitigative measures.

| Key Risks | Mitigative Measures |
|---|---|
| Flashback during ignition | Combustible atmosphere monitoring on vessels prior to ignition; do not ignite if a combustible atmosphere is present |
| Risk of secondary or unintentional fires | Monitor for burnable slick thickness in the vicinity of the burn; direct task force(s) accordingly |
| Heat from the fire | Maintain safe distances from the fire for all vessels and personnel |
| Exposure to smoke emissions | Position vessels and direct aircraft to avoid the anticipated smoke plume |
| Ability to extinguish fire | Plan, but assume the fire will not be extinguishable until it burns out. Release oil from the boom and have a vessel with long-range fire monitors to assist the break up of the burning slick |

#### 2.2.7.4 Containment

The initial critical decisions that must be made for a containment/burning strategy are whether to:

- Contain and burn near or away from the present location of the spill
- Contain and burn in a continuous or batch mode
- Use single or multiple containment systems to provide thickened oil for burning

Depending on the strategy selected, both fire-resistant and conventional booms may be required. Ancillary equipment requirements include adequate towlines, towing bridles and, in the case of actively cooled booms, pumping systems to furnish a continuous supply of water to the boom.

The operational plan should consider the need to periodically inspect, repair, or replace all or part of the fire-resistant boom to determine if the effects of the fire have degraded it. This will depend on the type of boom used, the size of the spill, and the intensity and duration of the burn. Options for slick containment are addressed in Sections 6.5 and 6.8, with various burning containment strategies presented in Section 6.7.

#### 2.2.7.5 Ignition

The main method of slick ignition will be the use of the Heli-torch system, especially if the oil is difficult to ignite. A small handheld igniter or ad-hoc ignition device can be used if the oil is relatively fresh.

An area must be designated for mixing the gelled fuel for the Heli-torch. Additional safety practices for fuel mixing and handling of the Heli-torch when it is accomplished aboard a vessel are specified in Section 5.2.3.5.

For large-scale and multiple-burn operations, supplemental fuel drums should be prepared at the fuel mixing/staging operation area to allow rapid turn-around of the Heli-torch for multiple ignitions.

For highly weathered oils and emulsions that are difficult to ignite, the Operations Plan should include the use of ignition promoters, such as emulsion breakers or distillate fuels, to facilitate effective ignition.

#### 2.2.7.6 Control/Extinction

Some control can be exercised over the size of the burn area, and hence the burning rate, by varying the sweep width and speed of advance of the containment system. Releasing one end of the towed boom, and advancing at a speed in excess of one knot, are two methods that have been proposed to extinguish a burning oil slick, but neither method has been attempted in field use. Extinguishment may not be immediate as it depends on the thickness of the contained slick and the size of the fire.

Depending on the size of the operation, a vessel with fire monitors should be able to assist a vessel with an accidental fire on board or a tow vessel experiencing difficulties. Fire monitors would not likely be effective at extinguishing a large oil fire on the water, but may be useful in herding it away from a stricken vessel or the spill source.

#### 2.2.7.7 Residue Recovery

Depending on the amount of unburned oil, plans for oil recovery could include the use of skimmers. Recovery of solidified burn residue would likely require manual techniques, such as the use of pitchforks, rakes, and sorbent materials from small boats. Safety gear, decontamination materials, and appropriate storage containers are required. Guidance on equipment selection for recovery is included in Section 4.5.

#### 2.2.7.8 Monitoring

In some instances, when there is concern that human populations could be affected by smoke from ISB, a smoke-monitoring program may be implemented (Note that this is not a regulatory requirement). Particulate monitoring would be done upwind of locations that are potentially affected, and the results would be communicated to the ICP as needed. Details are provided in Section 5.4.

#### 2.2.7.9 Evaluation of Effectiveness

The most accurate method for estimating burn effectiveness is to record burn times and burn areas, and to use the simple rules of thumb for the burn rate of the oil (Sections 3.2.4 and 6.9.1) to calculate an estimated burn volume. Video or still photographs of the burn are helpful in estimating burn effectiveness. Estimates of encounter rates, thickness, and coverage can be used to confirm the above calculation method, but with reduced accuracy due to the difficulty of estimating slick thickness.

# 3. FEASIBILITY CONSIDERATIONS

A number of factors should be considered when evaluating the feasibility of ISB. This chapter describes the considerations that are used in the Chapter 2 Decision Guide in more depth.

## 3.1 SOURCE CONDITIONS

### 3.1.1 Location

The following location criteria must be satisfied in order to consider the use of ISB:

- Offshore beyond 3 nautical miles (burning within 3 nautical miles usually is not permitted in the U.S.)
- Close to stockpiles of fire-resistant boom and other essential response resources
- In an area where a burn is environmentally sound:
  - Pre-approved ISB area or a region where a decision will be timely
  - Away from facilities and environmental resources that may be at risk from a burn, oil or burn residue that may escape
  - Safe distance from populated areas

### 3.1.2 Ignited vs. Unignited

If the oil is already burning, a decision must be made on whether or not to allow it to continue to burn. The decision is based on many factors, but the safety of the response personnel and the health of the public in the vicinity are the major issues. Fire-resistant boom may be used to keep the fire from spreading, and to concentrate the oil for more efficient burning. Self-ignited oil fires do not require administrative burn approval by local and federal authorities. Unignited oil spills, however, require a standardized approach to determine the feasibility of conducting a controlled burn.

### 3.1.3 Volume/Flow Rate

In general, the most reliable way to get accurate oil volume and flow rate information is to communicate with personnel familiar with the spill source. If available, a vessel's crew will have the best idea of the amount of oil lost and leaking out based on the oil levels in breached tanks or holds, and the pre-damaged volumes they held. The volume of oil in a tank that will leak out can be calculated based on the location of the breach, the initial levels, the tank dimensions and the exterior water level at the side of the damaged tank/hold. Oil will continue to leak out of a vessel until it reaches either the bottom of the breach opening or the exterior water level, whichever occurs first. Experienced personnel familiar with the source may be able to visually estimate flow rates from vessels, oilrigs, and pipelines. Oil thickness is very difficult to estimate, but there are several rules of thumb that are useful in determining thickness. Figure 3 can be used to visually estimate oil thickness and volume.

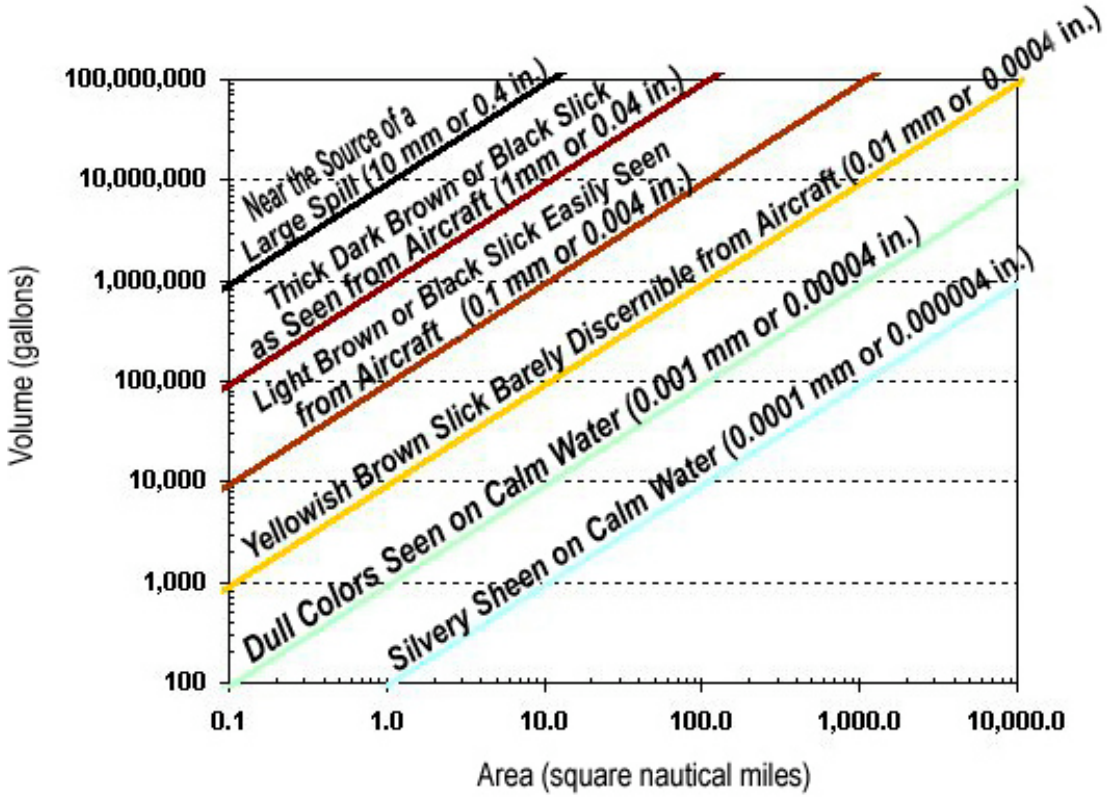


Note: Area of the slick is determined by multiplying the estimated length by the estimated width in nautical miles.

Figure 3. Aerial Oil Slick Thickness and Volume Estimator

## 3.2 OIL PROPERTIES/CONDITIONS

Oil properties and changing slick conditions are factors determining if ISB technology can be used and for how long it will be an effective approach. Over time, oil will weather and become more difficult to ignite and burn. It will also spread out and be transported by currents and wind. As oil properties and spill conditions change, different equipment and strategies may be more effective. As seen in a representative offshore spill-fates prediction model, Figure 4, over 30 percent of a medium crude oil spill evaporated within 55 hours. Under this scenario, 10,000 barrels of oil was spilled over a 48-hour period from an offshore oil rig 40 miles from shore with variable onshore winds from 15 to 25 knots. After 48 hours, the spill extended more than 40 miles and was close to landfall, making containment and removal by any method very difficult.

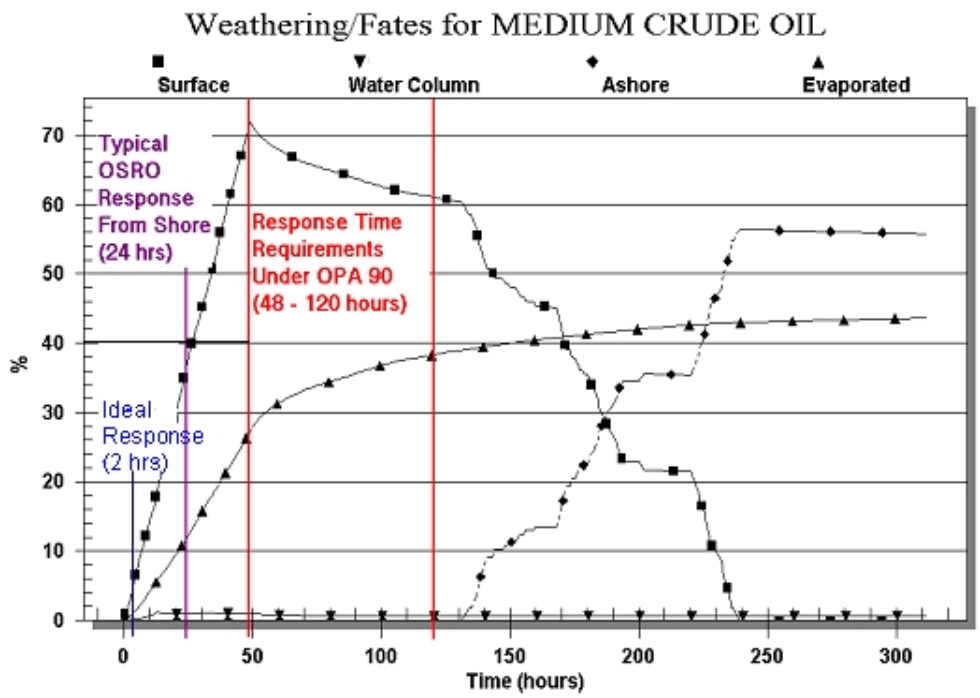


Figure 4. Offshore Oil Spill Weathering Prediction (OILMAP™ Fates Model)
(Note: OILMAP™ is a trademark of an oil spill trajectory and fates model produced by Applied Science Associates (ASA) of Narragansett, RI.)

### 3.2.1 Combustible Nature

Depending on their chemical makeup, some oils are more combustible than others. The lighter hydrocarbons are more combustible than the other components in oil, and they are the first components to evaporate. As the oil emulsifies over time, the water content increases, making it more difficult and eventually impossible to ignite and to sustain a burn.

**Flash Point** of fuel is used as an indicator of a potential fire hazard and as a general indicator of combustibility. This is the temperature to which the fuel must be heated to produce a vapor/air mixture above the liquid fuel which is ignitable when, under specified test conditions, it is exposed to an open flame. The lower the flash point, the easier it is to ignite the oil and the more readily flames will spread to cover the entire slick. As oil weathers over time, its flash point temperature increases.

Flash point is an extremely important factor in relation to the safety of spill cleanup operations. Gasoline and other light fuels can be easily ignited and the flames will spread very rapidly under most ambient conditions; therefore, they pose a serious hazard when spilled. Many freshly spilled crude oils also have low flash points until the lighter components have evaporated or dispersed. This is why extreme care is needed when igniting light fresh oils.

### 3.2.2 Other Oil Characteristics

**Pour point** of the oils is an indication, not an exact measure, of the temperature at which flow ceases. **Viscosity** is a measure of a fluid's resistance to flow; the lower the viscosity of a fluid, the more easily it flows. As temperature decreases, viscosity increases. The higher the viscosity, the slower the fluid will spread out on the surface of the water after the spill. Highly viscous emulsified oils and burn residue are difficult to skim, pump, and transport/unload. Water-in-oil emulsions are highly viscous and non-Newtonian fluids, the viscosity of which will decrease to some extent when pumped. There are many different standards of viscosity measurement. A standard which is familiar and which provides practical reference points should be used.

**Density** is defined as the mass per unit volume of a substance. It is most often reported for oils in units of gram per milliliter (g/mL) or grams per cubic centimeter ($g/cm^3$). Density is temperature dependent, decreasing slightly with increasing temperature. Oil will float on water if the density of the oil is less than that of the water. Almost all fresh crude oils, and most fuel oils, will float on both salt and fresh water. Bitumens and certain residual fuel oils may have densities greater than 1.0 g/mL, and their tendency to float will vary depending on the salinity and temperature of the water. The density of spilled oil will also increase with time, as the more volatile (less dense) components are lost. After considerable evaporation, the density of some crude oils may increase enough for the oils to sink below the water surface. The burn residue will be denser than the original oil mixture, and may have a tendency to sink in some cases.

Two measures of density are commonly used: specific gravity and American Petroleum Institute (API) gravity. Specific gravity (or relative density) is the ratio, at a specified temperature, of the oil density to the density of pure water. Fresh water at 4 $^{o}$C has a specific gravity of 1.0. The API gravity scale arbitrarily assigns an API gravity of 10 to pure water. Oils with low densities, and hence low specific gravities, have high API gravities. Seawater has a specific gravity of approximately 1.027, so oil will be more buoyant in seawater than in freshwater.

### 3.2.3 Oil Weathering Effects on Ignition/Burning

Oil weathering processes do not affect the ignition and burning of most light and medium distilled oil products, such as diesel, No. 2 fuel oil, kerosene, and jet fuels. Heavier, residual fuel oil and crude oil slicks become more difficult to ignite and burn efficiently as time progresses. This is due to both the evaporation of the volatile components, which curtails the rate at which flames spread across the surface of the slick, and the formation of stable water-in-oil emulsions, which prevents ignition of the slick.

#### 3.2.3.1 Emulsification

The formation of a stable water-in-oil emulsion in a slick will reduce the window of opportunity for ISB. The presence of a critical amount of water in the oil prevents the slick in contact with the ignition source from catching fire. Most light and medium distilled products will not form stable emulsions; however, many heavier fuel oils and most crude oils will.

The point at which a slick becomes unignitable due to emulsification is a function of the oil type and the strength of the ignition source. For some light crude oils that form unstable emulsions, the maximum ignitable water content is approximately 60 percent when using conventional Heli-

torch techniques (see Section 4.2). This is because the emulsions formed by these crudes will separate naturally when warmed. Crude oils and fuels that form more stable emulsions will generally become unignitable with Heli-torch fuel when their water content reaches 25 percent.

#### 3.2.3.2 Loss of Volatile Content

The loss of light aromatics by evaporation does not prevent the ignition of an oil slick, but it does slow (and eventually curtail) the spreading of flames from the igniter to the rest of the slick. In general, flames will only spread downwind and crosswind from an ignition source. The exception is volatile oils that have a flash point at or below ambient temperature, such as gasoline and gas condensates. For these volatile fuels, flames will spread rapidly in all directions, even upwind, because the air above the slick already contains a combustible mixture at ambient temperature.

The speed at which flames spread downwind over sub-flash slicks is a function of wind speed and oil volatility. This is related to the rate at which the existing flame heats the surface of the adjacent slick to its flash point. Decreasing slick volatility (i.e., from evaporative weathering, or emulsification) decreases the flame-spreading speed. Some residual fuel oils (e.g., No. 6 fuel oil) have so few light ends to begin with that, even though the slick beneath the igniter can begin to burn, the flames never spread away from the igniter. The use of flame spreading promoters (see Section 4.2.4.1) may help with setting these types of slicks on fire.

Increasing wind speed boosts the downwind flame-spreading velocity. In windy conditions, flames tend to spread directly downwind from an ignition source, with little or no crosswind spreading. Current and swell do not appear to affect flame-spreading rates, but choppy or steep waves will reduce flame spreading.

### 3.2.4 Oil Thickness Effects

The likely success of an ISB operation is also dependent on the thickness of the oil to be burned. Both ignition success and burn efficiency are highly dependent upon slick thickness. The thickness of the oil contained in the apex of a fire-resistant boom being towed at proper speeds will eventually reach several inches or more.

#### 3.2.4.1 Ignition/Burning

For an oil slick on water to be ignited, it must be thick enough to insulate itself from the water beneath it. This condition must be met so that the surface of the oil can be heated by the igniter to the temperature (the flash point) at which it produces sufficient vapors to ignite. The underlying water acts as a heat sink making it difficult to ignite thin slicks. The rules of thumb for minimum ignition thickness are listed in Table 7. It is important to know that flames can spread, quite rapidly in some cases, over fresh slicks as thin as 0.5 mm.

Table 7. Minimum ignitable thickness.

| Oil Type | Minimum Thickness |
|---|---|
| Light crude and gasoline | 1 mm (0.04 inches) |
| Weathered crude and middle-distillate fuel oils (diesel and kerosene) | 2 to 3 mm (0.08 to 0.12 inches) |
| Residual Fuel Oils and Emulsified Crude Oils | 10 mm (0.4 inches). |

The rate at which oil is removed from the surface of a slick by combustion is loosely related to slick thickness. The rules of thumb for oil burn rates are provided in Table 8.

Table 8. Burn/removal rates for large fires.

| Oil Type/Condition | Burn/Removal Rate |
|---|---|
| Gasoline >10 mm (0.4 inches) thick | 4.5 mm/min (0.18 in/min) |
| Distillate Fuels (diesel and kerosene) >10 mm (0.4 inches) thick | 4.0 mm/min (0.16 in/min) |
| Crude Oil >10 mm (0.4 inches) thick | 3.5 mm/min (0.14 in/min) |
| Heavy Residual Fuels >10 mm (0.4 inches) thick | 2.0 mm/min (0.08 in/min) |
| Slick 5 mm thick* | 90 percent of rate stated above |
| Slick 2 mm thick* | 50 percent of rate stated above |
| Emulsified oil (percent of water content)** | Reduced by the water content percent of the rate specified above |
| Estimates of burn/removal rate based on experimental burns and should be accurate to within ±20 percent. | |

* Thin slicks will naturally extinguish, so this reduction in burn rate only applies at the end of a burn.
** If ignited, emulsions will burn at a slower rate almost proportional to their water content (a 25 percent water-in-crude-oil emulsion burns about 25 percent slower than the unemulsified crude).

Burn rate is also a function of the size of the fire. Crude oil burn rates increase from 1 millimeter per minute (mm/min) with 3-foot fires to 3.5 mm/min for 15-foot fires and greater. For very large fires, on the order of 50 feet in diameter and larger, burn rates may actually decrease slightly because there is insufficient oxygen in the middle of the fire to support combustion at 3.5 mm/min. The effect of oil type on burn rate disappears as fire size grows to the 50-foot range, for the same air-starvation reason.

An in-situ oil fire extinguishes naturally when the slick burns down to a thickness that allows enough heat to pass through the slick to the water to cool the surface of the oil below its flash point. This situation reduces the concentration of flammable vapors above the slick to a level that is below combustible limits. The thickness at which an oil fire on water extinguishes is related to the type of oil and initial slick thickness. The rules of thumb are presented in Table 9.

Table 9. Fire extinguishing slick thickness.

| Oil Type/Initial Slick Thickness | Extinguishing Thickness |
|---|---|
| Crude Oil up to 20 mm (0.8 inches) thick | 1 mm (0.04 inches) |
| Crude Oil 50 mm (2 inches) thick | 2 to 3 mm (0.08 to 0.12 inches) |
| Distillate Fuels any thickness | 1 mm (0.04 inches) |

#### 3.2.4.2 Burn Efficiency

Oil removal efficiency by ISB is a function of the following factors:

- Initial thickness of the slick
- Thickness of the residue remaining
- Amount of the slick's surface that was on fire

Given a reasonably accurate estimate of the initial thickness of a fully contained slick, oil removal efficiency by burning is relatively easy to estimate. If not all the slick area is on fire; the calculations need to be modified. Appendix D provides the calculations required to estimate burn effectiveness.

In the apex of a fire-resistant boom under tow, the oil thickness is maintained by the water current, and the fire slowly decreases in area until it reaches a size that can no longer support combustion. This herding effect can increase overall burn efficiencies, but it extends the time required to complete each burn. Conversely, slowing the tow speed increases the fire area and the oil removal rate, but it decreases the overall burn efficiency.

## 3.3 WEATHER AND ENVIRONMENTAL CONDITIONS

The severity of weather and environmental conditions limit the options available in spill responses and also affect the efficiency of the operations. Understanding the limitations of various technologies and equipment in different conditions assists in planning and executing the best options available. Strategies and tactics may have to be adjusted in response to changing weather and environmental conditions. As weather deteriorates, equipment can fail and personnel safety becomes more of a concern.

### 3.3.1 Containment Effects

Containment involves transporting, deploying, and maneuvering spill response equipment by ships and boats. Waves, currents, wind, and visibility can degrade or even stop containment operations as weather conditions deteriorate. Fire-resistant boom is generally more fragile and usually has lower reserve buoyancy than conventional inflatable offshore oil containment boom. This makes some fire-resistant boom more susceptible to damage, and more likely to lose oil due

to excessive wind, waves, and currents, especially during and after a burn when its materials may become brittle or damaged by the intense heat.

#### 3.3.1.1 Waves

Short-crested choppy waves are the most disruptive to the effectiveness of boom and skimmers, as they sometimes cause oil to wash over the top or be carried under the bottom, depending upon the boom dimensions and wave-following characteristics. Choppy seas above three feet will often cause splash over of offshore boom. These breaking turbulent waves also contribute to emulsification of the oil. Long period swells (greater than 8-second period) less than six feet high do not generally degrade equipment performance, but they may affect the people operating on vessels from a seasickness and deck safety perspective.

#### 3.3.1.2 Currents

High currents or excessive speed of advance of the equipment can degrade the performance of boom and skimmers. Currents above 0.75 knots perpendicular to a boom cause the oil to start to entrain under the boom no matter how deep the skirt. At currents just above 1 knot, conventional U-shaped containment booms will lose oil at a very high rate. As currents increase, the forces on the equipment also increase dramatically. These fast-water conditions often destroy the equipment or render the towing vessels or anchors ineffective due to the increase load they must pull against. There are, however, tactics and specialized equipment that can contain and divert oil in currents or tow speeds above 1 knot. Diversion tactics, fast-water boom, special sweeps, and flow diverters are very useful in fast water situations. Advancing fast-water systems can collect oil at a faster rate, which shortens the collection time improving the chance for a successful burn. For more information on tactics and equipment in fast water conditions, see the USCG Fast-Water Field Guide (see the Reference and Resources section for the traditional citation and Internet link.)

#### 3.3.1.3 Wind Speed and Direction

Oil drifts downwind at a speed approximately 3.5 percent of the wind velocity. Table 10 can be used to estimate the oil drift caused by the wind-driven current. The wind-driven current and other tidal currents present transport the oil in a speed and direction determined by vector addition of the individual velocity components. If this resultant drift is toward either the shore or a sensitive environmental area, the time to respond is reduced. Oil spill trajectory models automate the calculation of oil transport and weathering process, and are very useful in developing strategies for containment and burning. Wind speeds above 20 knots make it difficult to ignite the oil and sustain a burn. They also pose safety risks. Burning oil in winds above 20 knots is also difficult due to the short-crested waves that are generated. **Therefore, ISB should not be attempted in wind speeds above 20 knots.**

Table 10. Wind drift of oil.

| Wind Velocity (knots) | Oil Drift (knots) |
|---|---|
| 5 | 0.18 |
| 10 | 0.35 |
| 15 | 0.53 |
| 20 | 0.70 |
| 25 | 0.88 |

### 3.3.2 Other Environmental Effects

Environmental conditions may affect the safety of ISB operations and may also degrade the ignitability or sustained burning characteristics of the contained oil.

#### 3.3.2.1 Rain

Rain reduces visibility for aircraft spotting and at-sea operations. It may also reduce the ignitability of contained oil. **Therefore, burning should not be initiated if rain is significant or a downpour is forecast during the planned burn operation.** If a burn is in progress when it starts to rain, continue the burn until it goes out or until it is no longer safe to proceed due to visibility issues.

#### 3.3.2.2 Daylight

Daylight is essential to accurately assess the conditions and safety of a burn. Therefore, do not initiate a burn that cannot be completed in daylight unless the benefits greatly outweigh the risks. Under ideal conditions, burning could be conducted at night at a fixed continuous spill source; however, extreme caution is recommended. At night, it would be very difficult to detect oil on the water surrounding the burn. This oil would be a fire hazard for the towing and any other support vessels in the vicinity.

#### 3.3.2.3 Visibility/Flying Conditions

Visibility is essential to assess the conditions and safety of a burn. Experienced pilots and boat captains should be used to determine if conditions are safe for a burn operation. **ISB should not be initiated in poor visibility. Extinguishing an ongoing burn should be strongly considered if it cannot be safely monitored as visibility diminishes.**

#### 3.3.2.4 Atmospheric Mixing - Plume Effects

Under certain atmospheric conditions, which are more common over land, the plume may linger at low altitude due to temperature inversions in the local area. This may cause visibility problems for spotter aircraft and, in some cases, health and visibility concerns on the water and in populated land areas adjacent to the burning site. These are the same atmospheric conditions that typically cause smog formation over large cities. **Therefore, before ignition is approved, it**

**is important to get an accurate forecast of the atmospheric conditions to ensure that adequate mixing will occur to dissipate the smoke plume that forms.**

## 3.4 TRAJECTORY

A prediction analysis of the oil and smoke plume trajectories should always be conducted to properly and safely plan and execute a successful ISB. Accurate predictions of pollutant trajectories will assist with selection, use and deployment of the best resources available. The response team's scientific-support coordinator is usually responsible for such predictions; however, the responsible party or local authorities may also have their own models that may be tailored to the local area conditions. Trajectory models are only as good as the scientific assumptions they use and the quality of data and information that are provided to them on the environmental conditions. Therefore, it is essential that they be used as guidance and validated/updated with field observation as the spill progresses. Experienced personnel should be assigned to run the model trajectories using locally updated wind and current measurements in lieu of historical data whenever possible.

### 3.4.1 Oil Slick Trajectory

When oil is spilled it spreads out concentrically. The oil is also transported by currents formed by wind, local tidal currents and other locally generated currents and eddies. This movement is known as advection. As the slick thins out, it may break into smaller spillets due to eddies in the surface currents, wind and wave action. There are thick and thin portions of a slick usually identifiable by the color of the spillets. Oil containment should initially concentrate on the thick spillets to maximize the volume of oil collected for removal. Trajectory models usually accurately predict the general movement of the oil with the exception of some spillets that may separate from the main slick and be advected by slightly differing currents. Over time, the accuracy of these models degrades unless they are updated with visual observations and timely field current and wind data.

### 3.4.2 Burn Residue Movement

Burn residue is usually denser than the original pre-burn oil characteristics, and usually does not spread due to its increased viscosity or solid nature. Laboratory tests indicate that the burn residues of 40 to 60 percent of crude oils available worldwide may sink, but their acute aquatic toxicity is very low or nonexistent. It may still cause a localized smothering of benthic habitats and fouling of fishnets. Turbulent water with suspended silt or sand also contributes to the possible sinking of oil. Even these heavier residues are often buoyant for a short time. This may provide sufficient time for quick recovery but the residue may still be warm so caution must be taken. Predicting submerged-oil trajectories is difficult due to the three-dimensional nature of the problem. Few trajectory models are designed to address such a complex situation, and subsurface current data are seldom available to use in such models.

If the oil remains on the surface, its trajectory can be predicted, but it may move more slowly in windy conditions than its original pre-burn condition because it will now float in a nearly submerged condition. If it submerges, its trajectory will be very difficult to predict because currents will change direction and usually slow down in deeper water. In some cases, the current

direction may reverse at lower depths. The submerged oil may stay at a certain depth where the water density changes abruptly due to temperature and/or salinity variations.

### 3.4.3 Smoke Plume Composition and Trajectory

The smoke plume consists mainly of carbon dioxide, water, and carbon particulates. Other gases in low concentrations (below 1 percent) include carbon monoxide, sulfur dioxide, oxides of nitrogen, aldehydes, ketones, and other combined products. The smoke plume is initially very black and visible for many miles from the burn site.

Prediction of the plume trajectory is required to determine if it will move toward populated areas. The two concerns are the potential human exposure to pollutants, and the reduced visibility near shipping channels, airports and highways. The smoke plume will rise quickly and travel downwind at the velocity and direction of the upper air currents it encounters. The majority of the plume will stay up in the air, disperse and not come down to the surface. Concerns over human health issues are reduced due to the fact that it rises quickly and remains aloft. The dispersion, mixing, and transport of a smoke plume are difficult to predict due to the turbulent nature of the three-dimensional physics involved but in general, the smoke plume will disperse within several hours of transport down wind.

Two models are available to predict trajectories of ISB smoke plume pollutants. The more sophisticated model includes the effects of land topography, surface roughness, atmospheric inversions, fire and chemical reactions. This is the ALOFT model that is used by the National Institute of Standards Technology (NIST) to predict plume trajectories for burn incidents and ISB operations. A simpler public domain model called the In-Situ Burn Calculator™, is available through the National Oceanic and Atmospheric Administration (NOAA) Spill Tools application available at their web site (Reference, Internet Links, U.S. Federal Government). It is important that experienced users be selected to conduct the smoke plume analysis to ensure the proper model and parameters are selected to obtain an accurate prediction.

# 4. EQUIPMENT

Equipment is required to contain, transport, ignite, burn and recover oil, and burn residue. With the exception of fire-resistant boom and igniters, all other equipment is typical for an offshore oil-spill response.

## 4.1 CONTAINMENT

Containment of spilled oil is generally required for ISB. Typically, conventional offshore oil-spill boom is used to divert, contain, and transport oil to the controlled burn area. Advancing high-speed or fast-water oil containment systems can speed up the oil collection process to expedite the time-critical burn operation. Fire-resistant boom is used to consolidate the oil and to contain it while it is burning. Maneuvering the booms provides control of the flow of oil into the fire, the size of the burn area and the thickness of the burning oil. In an uncontrolled burn scenario, fire-resistant boom keeps the burning oil from igniting structures or moving into environmentally sensitive areas. Boom can also be used to starve an unconfined fire of oil to allow it to burn out.

Two indicators of containment system performance can be used in planning a spill response. Oil Encounter Rate (OER) is used to define the upper most volume of oil per unit time that each containment system will reach under ideal conditions. It is a function of sweep width, speed, and oil thickness. This measurement method assumes that the slick encountered by the containment system is continuous with an average thickness that can be estimated, which is rarely the situation. Oil Containment Rate (OCR) accounts for limitations to the system by incorporating the efficiency of the containment system (includes oil losses due to entrainment and splash over). See Appendix D for calculations.

OER and OCR are tools to estimate the amount of oil that can be recovered over a specific period of time under various conditions for each containment system used. Other equipment and logistics limitations that must also be considered when planning a burn operation include:

- Variability in the oil slick size and thickness
- Currents, wind, and wave conditions
- Maximum oil-containment capacity of the advancing system
- Containment losses due to entrainment and splash over
- Distance the sweep must travel to get to the oil slick
- Time to transit a designated ISB site once the oil is collected
- Time to transfer oil from the sweep into the fire-resistant boom

This type of analysis will assist planners in selecting the appropriate types and quantities of advancing containment systems and fire-resistant boom for the spill incident at hand.

### 4.1.1 Fire-resistant Boom

To achieve an effective burn, boom is required to create and maintain an oil thickness that will burn efficiently. The two main requirements for fire-resistant boom are to provide oil containment (flotation, draft, and freeboard) and to resist fire damage. This section provides a brief description of the main types of fire-resistant boom. Additional detailed specifications are provided in Appendix C for products that are commercially available in the United States and have been involved in recent fire-resistance testing.

Two main methods of providing fire resistance are used. Passive, or intrinsically fire-resistant boom, uses fire-resistant materials such as ceramic fibers or stainless steel. The active method keeps the boom materials within an acceptable range of temperatures by supplying coolant (usually water) to surfaces of the boom. Other ad-hoc methods of containment are also described at the end of this section.

A number of booms have been tested at the National Oil Spill Response Test Facility (Ohmsett) and have been found to have similar containment limits as conventional boom, with first-loss tow speeds in the range of 0.85 to 1.0 knots when towed in calm water in a U-shape. Due to the weight of materials used for fire resistance, the weight per unit length is generally much higher, and the buoyancy-to-weight (b/w) ratio is much lower than for conventional booms of a similar size. Their lower b/w ratios mean that they are generally not applicable for high sea states. Fire-resistant booms often require special handling, partly due to their higher weight and due to the use of materials that are less rugged than those used in conventional booms.

Tests to confirm fire resistance have been performed in recent years, and the American Society for Testing and Materials (ASTM) International has developed a standardized test (F 2152-01). The test comprises three 1-hour burn cycles separated by two 1-hour cool-down cycles during which the boom is exposed to waves. The test is designed to simulate the stresses that a boom would receive in a typical burn scenario, where the boom is used alternately to collect oil and then contain it during a burn. A heat exposure is specified to simulate the effects of a crude oil fire. In the test, the heat can be supplied by either burning diesel or using a specially designed propane system that is available at Ohmsett and provides an equivalent heat. Booms are judged to have passed the test if they survive and can contain oil at the conclusion of the cyclic heat exposure.

Based on these tests, there is recognition that many fire-resistant booms have a limited life when exposed to fire, which means that an extensive ISB operation will require the periodic replacement of boom, depending on the intensity and duration of the burn. Data to determine a specific rating for a boom product is contained in Appendix C.

#### 4.1.1.1 Intrinsically Fire Resistant

This type of fire boom relies on the use of fire-resistant materials to survive the effects of the burn. Two main approaches are used:

- Layers of ceramic fiber and/or stainless steel mesh surround a glass or ceramic-foam core

- Stainless steel sheet metal for the flotation chamber and all other above-water components

The following are examples of intrinsically fire-resistant boom (listed alphabetically) that are commercially available in the United States and have been involved in recent fire-resistance testing. Any potential omission of fire boom currently on the market is not an indication that it will not be effective.

**American Marine Fire Boom** (Elastec/American Marine), formerly known as the 3M boom, consists of flotation sections made of rigid ceramic foam that is encased by two layers of stainless steel knitted mesh, a ceramic textile fabric and a polyvinyl chloride (PVC) outer cover. The PVC material also extends below the floats to form the skirt. A stainless steel tension cable provides strength immediately below the flotation element, and a chain along the bottom of the skirt provides additional tensile strength and ballast.

**Auto Boom Fire Model** (Oil Stop) consists of several layers of fire-resistant material – stainless steel mesh and refractory matting – over a coated glass fabric flotation chamber. The skirt is made of a polyurethane fabric. A chain located at the bottom of the skirt provides tensile resistance and ballast. The boom is designed to be stored on and deployed from a reel. The boom is inflated from one end as it is deployed.

**PocketBoom** (Applied Fabrics) consists of alternating flotation and connector sections and uses all stainless steel construction. The flotation sections are air-filled chambers at ambient pressure; these are joined by connector sections that are hinged, corrugated stainless steel attached with Navy-style connectors. An articulated box beam runs through the corrugated material to provide tensile resistance. A lifting frame and harness have been specially designed to ensure safe and effective launching and recovery.

**PyroBoom** (Applied Fabrics) has a freeboard constructed of a refractory material and a skirt made of a conventional urethane-coated material. Hemispherical stainless steel floats are attached to each side of the boom. The modular construction of the boom allows for its maintenance and repair in the field.

**SeaCurtain FireGard** (Kepner Plastics) uses a heavy-gauge stainless steel coil covered with a high temperature refractory material to make up the flotation sections of the boom. The skirt is made of a polyurethane-coated polyester or nylon fabric. The boom is designed to be stored on a reel, and as it is pulled off the reel during deployment, the stainless-steel coil springs form a flattened position and causes the boom to self-inflate.

#### 4.1.1.2 Actively Water Cooled

Actively cooled boom uses water (or other coolant) to cool the exposed surfaces of the boom and, thereby, increase the boom's fire resistance. Some boom designs in this category have relied on water simply being wicked into a protective layer, but the more common approach now is to actively pump water through a cover protecting the boom. Water is pumped from the tending vessel through a hose leadin to the boom. At the boom, various methods are used to distribute the water to cool key components.

The following are examples (listed alphabetically) of actively cooled fire-resistant boom that are commercially available and have been involved in recent fire-resistance testing. Any potential omission of fire boom currently on the market is not an indication that it will not be effective.

**Hydro-Fire Boom** (Elastec/American Marine) is a water-cooled, inflatable boom that is designed to be stored on and deployed from a reel. The boom is constructed much as a conventional curtain boom, but a fire-protection layer blankets the above-water portion. A chain located at the bottom of the skirt, provides tensile resistance and ballast. During use, water is actively pumped through the fire-protection layer, saturating and cooling the boom.

**Water-Cooled Fire Boom** (Oil Stop) is an inflatable boom with an internal water-cooling system. The flotation chamber is insulated with a ceramic blanket covered with a stainless steel mesh. The skirt is made of a polyurethane fabric. During use, seawater is pumped from the towing vessel to the boom. Within the boom, a series of hoses circulates the water through the porous cover of the boom to cool it and allow it to withstand the effects of the fire. A chain located at the bottom of the skirt provides tensile resistance and ballast. The boom is designed to be stored on and deployed from a reel.

#### 4.1.1.3 Ad-Hoc Methods

In the absence of fire-resistant boom, or as a temporary measure, ad-hoc containment can be attempted. Materials such as logs could be used. Other methods of containment for ISB have been proposed but have never been tested in an operational setting or large-scale field trial. These include the use of water jets and bubble barriers, which are discussed in the Fast-Water Oil Spill Technology Assessment report, cited in the Traditional Reference section.

### 4.1.2 Offshore Boom

Inflatable boom is typically used offshore, where high freeboard and good wave following performance are highly desirable. It is constructed of coated fabric and usually reinforced with a ballast chain that runs along the bottom. Typical offshore boom will be strong and have a high reserve buoyancy to weight ratio to ensure good wave following and dynamic stability performance under load. Both speed and safety of boom deployment are highly desirable. This is usually accomplished by hydraulically operated boom reels or special deployment configurations (rolled or fan folded boom packs).

Funnel boom is a wide mouth, open apex, V-shaped boom configuration that was demonstrated in a recent Galveston ISB exercise to consolidate simulated oil for burning with a fire-resistant boom. Each leg consisted of 1,000 feet of offshore inflatable boom. The open apex was spaced with a 50-foot wire bridle (Figure 5). The two towing vessels were spaced 750 feet apart. It was towed at speeds of excess of 1 knot. The bridle parted on one occasion, and in some cases the boom legs sagged allowing entrainment of the simulated oil. Practice and training is needed to perform this operation effectively.

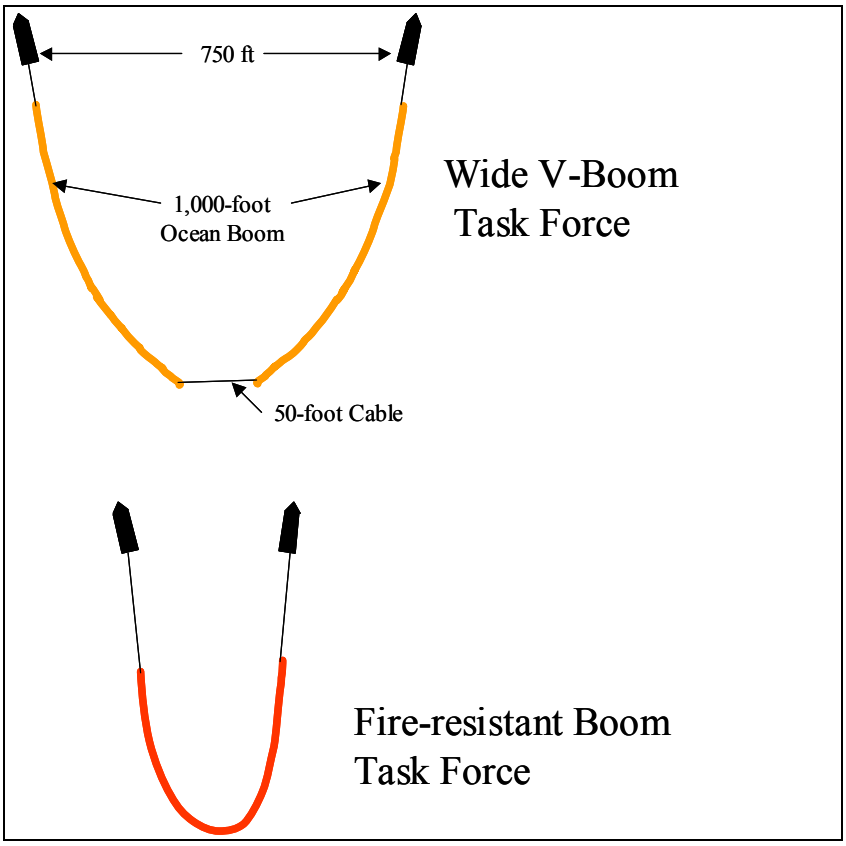


Figure 5. Funnel boom—Wide V-shaped, open apex operation.

### 4.1.3 High-speed Containment Systems

High-speed boom and sweeps may be beneficial to ISB operations when used in the advancing mode to contain and transport oil to the burn area more quickly. Many types of fast-water systems including specialized booms, sweeps, and diverters, are available that operate in the advancing mode above 1 knot and in fast currents. They are generally more expensive than conventional boom; however, the added benefits usually more than compensate for this. A complete description of fast-water equipment and tactics are provided in Coe and Hansen, 2001 and Coe and Gurr, 1998.

High-speed sweep systems usually have small sweep widths and low draft due to the difficulty of retaining proper shape under higher drag loads; however, this is not always a liability because oil will often form narrow windrows that are efficiently recovered with more maneuverable advancing sweep systems or skimmers. Compared to conventional U-shaped containment tactics at 0.75 knots, the same amount of vessel resource can more than double their oil recovery rate with high-speed advancing systems.

High-speed containment systems provide the following benefits:

- Faster oil recovery - fresher oil is easier and more efficient to burn
- Greater volume of oil recovered - more oil is collected than using conventional sweeps

- Less escaped oil to impact the shore and environmentally sensitive areas
- Lower cost in resources allocated and less time to complete
- Greater reliability and efficiency - equipment is more tolerant of faster towing, thus reducing the potential of equipment damage and oil entrainment at speeds above 1 knot
- Broader selection of tow vessels that are not limited to slow-speed, 1 knot requirements

High-speed systems, with the exception of the Funnel boom described above, have not been used in ISB exercises. Some designs, such as the USCG buoy tender's Spilled Oil Recovery System (SORS) Fast-Sweep boom, may require some practice and innovations to perfect a method to release the oil into the fire-resistant boom. A net, attached to the foot of the boom and used to keep the boom's V-shape, precludes the use of traditional oil release methods. Two untested tactics may be feasible with this V-shaped boom, such as the speed-up release or use of a floating trailing line attached to the foot of the apex that could be raised to release oil. The Fast-Sweep boom has an apex section that is removable to allow it to function as a funnel boom.

Desirable attributes of offshore and high-speed boom are summarized below in Table 11. Some attributes exceed the minimum offshore-boom requirements of 40 CFR 112. The opposite is true for some attributes of high-speed boom, which are not specifically addressed by the regulations. For example, a compromise on draft (shallow draft) is desirable to improve the deflection mode shape-keeping attributes and oil retention characteristics at speeds above 1 knot.

Table 11. Desirable boom attributes.

| Boom Type | Minimum Freeboard (in.) | Minimum Draft (in.) | Maximum Draft (in.) | Minimum Reserve Buoyancy to Weight Ratio | Minimum Boom Tensile Strength (lb) |
|---|---|---|---|---|---|
| Offshore | 18 | 18 | 30 | 8:1 | 20,000 |
| High-Speed | 12 | 4 | 12 | 10:1 | 30,000 |

## 4.2 IGNITERS

A variety of methods are available to ignite an oil slick, including devices designed or modified specifically for ISB as well as simple, ad-hoc methods. This section describes the main types of ignition devices as well as techniques and materials that can be used to assist in the ignition process. Detailed specifications of commercially available igniter products are provided in Appendix E.

Two components are essential for the successful ignition of oil on water. These are heating the oil to its flash point, such that sufficient vapors are produced to support continuous combustion and providing an ignition source to start burning. For light refined products, such as gasoline and some unweathered crude oils, the flash point may be close to the ambient temperature and little if any pre-heating will be required to enable ignition. For other oil products, and particularly for those that have weathered and/or emulsified, the flash point will be much greater

than the ambient temperature and substantial pre-heating will be required before the oil will ignite.

The choice of one igniter over another for a given application will depend mainly on two factors:

- Degree of weathering or emulsification of the oil, which will dictate the required energy level of the igniter
- Size of the spill, which will determine the number of ignitions required to ensure an effective burn

### 4.2.1 Heli-torch

The Heli-torch was originally developed as a tool for burning forest slash and for setting backfires during forest-fire control operations. It was adapted for use in ISB in the mid-1980s and found to be an effective system for igniting spilled oil. The Heli-torch has been tested extensively, used in a number of field trials, and refined considerably over the years, resulting in its being viewed as the igniter of choice for ISB.

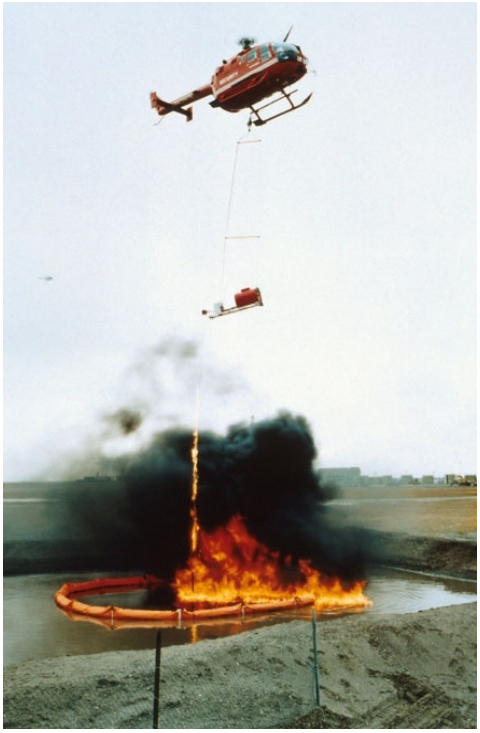

Figure 6. Heli-torch and Fire-Resistant Boom Test.

The Heli-torch emits a stream of gelled fuel, typically gasoline, that is ignited as it leaves the device. The burning fuel falls as a stream that breaks into individual globules before hitting the slick, as seen during tests in Figure 6. The burning globules produce a flame that lasts for several minutes, heating the slick and then igniting it. The globules' burn time depends upon the fuel used and the mixing ratio of the fuel and gelling powder. Although gasoline is the fuel typically used, alternatives such as diesel, crude oil, or mixtures of the three fuels, have been found to produce a greater heat flux, and they should be considered for highly weathered oils and emulsions that may be difficult to ignite.

The key features of the Heli-torch are:

- Main components of the system are a storage drum to contain the gelled fuel, a pump and motor assembly and electrically fired propane jets
- System is mounted on a support frame that is slung beneath a helicopter and connected to controls in the helicopter cockpit
- Gelled fuel is pumped on demand to the ignition tip, where the propane jets ignite it

The fuel is gelled by using Surefire, which is a fine powder that forms a viscous gel when mixed with liquid fuel. Surefire is added through an entry port of the storage drum, which is equipped

with a hand crank for mixing. A ratio of 4 to 6 pounds of gelling agent per 55 gallons of fuel is typically used. The mixture is adequately gelled using this ratio after a few minutes of mixing at room temperatures. In near or sub-freezing temperatures, a higher ratio and more mixing time are required to gel the fuel.

The recommended operating conditions for the Heli-torch are an altitude of 25 to 75 feet and airspeed of 25 to 30 knots. These conditions optimize the accuracy of hitting the target slicks, minimize the loss of gelled fuel while burning in the air, and prevent the extinguishment of droplets by helicopter downwash.

Tank capacities for the gelled fuel mixture range from 30 to 300 gallons. The most common model has a capacity of 55 gallons and a pumping rate of approximately 15 gallons per minute (gpm), for a total application time of about 4 minutes. The system is rigged to allow for a fast changeout of the drum with a full replacement when it is empty. A skilled ground crew can perform this task in 5 to 10 minutes.

The weight of the system with a full 55-gallon drum is 534 lb. The system is slung by a support cable assembly that can be jettisoned quickly from the helicopter's cargo hook. The electrical supply cable includes a quick-release plug that can be easily pulled apart if required. When used with a helicopter that has a swivel cargo hook the Heli-torch may rotate during flight and a self-releasing horizontal support arm or other stabilizing assembly should be used.

The U.S. Federal Aviation Administration (FAA) Federal Aviation Regulation (FAR) Part 137 approves the Heli-torch ignition system. The charter company supplying the helicopter for the Heli-torch operations must be FAA-certified to sling-load petroleum and the pilot must have FAR Part 137 certification. Transporting the fuel to the staging site and carrying fuel beneath a helicopter both require approval by the Office of Hazardous Materials Transportation (OHMT) and in the Department of Transportation.

### 4.2.2 Handheld Igniters

A variety of igniters have been developed for use as devices to be hand thrown from a vessel or helicopter. These igniters have used a variety of fuels, including solid propellants, gelled kerosene cubes, reactive chemical compounds, and combinations of these. Burn temperatures for these devices range from 1200 °F to 4500 °F and burn times range from 30 seconds to 10 minutes. Most handheld igniters have delay fuses that provide sufficient time to throw the igniter and to allow it and the slick to stabilize prior to ignition.

Three commercially available handheld igniters are the Dome Igniter, the Simplex Model 901, and the ESSM Flare Type Igniter. Specifications and sources of supply of these devices are provided in Appendix E.

### 4.2.3 Ad-Hoc Igniters

For small contained spills, simple ad-hoc techniques can be used to ignite the oil. For example, propane-fired or butane-fired weed burners have been used to ignite oil on water. As weed-burners or torches tend to blow the oil away from the flames, these techniques would only be applicable to thick contained slicks. Rags or sorbent pads soaked in fuel have also been

successfully used to ignite small spills. Diesel is more effective than gasoline as a fuel to soak sorbents or rags because it burns more slowly and hence supplies more pre-heating to the oil.

Gelled fuel can also be used without the Heli-torch as an ad-hoc igniter. This was the method used for the test burn during the Exxon Valdez spill in 1989 (A. Allen, 1991). Gasoline and gelling agent were mixed by hand in a plastic bag, and then the bag was ignited and allowed to drift into the slick contained within a fire-resistant containment boom.

### 4.2.4 Additives

A variety of additives have been tested for use with ISB, including ignition promoters, combustion promoters, and smoke inhibitors.

#### 4.2.4.1 Ignition Promoters

Ignition promoters are used to increase the ignitability of an oil slick or to promote the spreading of flame over the surface of a slick. Petroleum products, such as gasoline, diesel, kerosene, aviation gasoline, and unweathered crude oil, have all proved effective as ignition promoters. Of these, the middle distillates, such as diesel and kerosene, are preferred because they burn more slowly and produce a higher flame temperature. Crude oil is the next best promoter because it contains a mixture of components that burn long and hot.

Emulsion-breaking chemicals can also be considered as ignition promoters. The concept is to apply the chemical to emulsified oil to break the emulsion in-situ, thus increasing the likelihood of successful ignition. Large-scale tests have proven the feasibility of this approach and research continues to include emulsion-breaking chemicals in the fuel of the Heli-torch system. There are presently no demulsifiers on the NCP approved list of chemicals for oil spill use; however, their use as combustion promoters (which are permitted under the NCP) is not specifically excluded. Most of the demulsifiers and other ignition promoters will be consumed in the resulting fire.

When using an ignition promoter, it is important to distribute the promoter over as large an area as possible. Simply pumping it onto one location of the slick will create a thick pool of the promoter in one area and it will not promote ignition effectively.

#### 4.2.4.2 Combustion Promoters

Combustion promoters are substances that are added to a slick to increase the burning efficiency. They typically act as a wick or insulator between the slick and the underlying water. Peat moss is a readily available product that has proved to be effective when burning a variety of oils, including heavy oils such as No. 6 fuel oil. Sorbent sheets and pads have also been used as wicking agents. In either case, the use of combustion promoters is generally restricted to smaller spills where access is available to manually apply the promoter to the slick.

#### 4.2.4.3 Smoke Inhibitors

Considerable research on smoke inhibitors has been accomplished; however, they are not considered suitable for operational use at this time. Laboratory-scale and full-scale tests have shown the beneficial effects of adding organometallic compounds to an oil slick to reduce smoke production during an ISB. Ferrocene and its derivatives have been researched the most extensively for application in oil spills.

The problems with using ferrocene powder are its high cost, slow dissolution rate in oil, and high density (higher than water). The latter two factors make effective application difficult. Newer versions of the product are formulated as liquids. One recent ferrocene hybrid has been developed as a liquid concentrate, allowing spray application; at a dosage of 0.5 percent it can reduce soot by up to 70 percent. Ferrocene, however, is not on the NCP product schedule and is still considered experimental.

## 4.3 VESSELS

Vessels are used to transport people, equipment, supplies, and barges to and from the operation area. They must be able to transit quickly and to withstand the rigorous environmental conditions offshore for extended periods of time while keeping the people and cargo safe. Vessels may be used to tow boom and transport monitoring equipment. Smaller vessels may be required for fire safety operations. To accomplish these functions they must meet the minimum requirements and, most important, be available when called upon in an emergency. Chartering contracts for vessels that meet the requirements identified in ACPs should be negotiated in advance. Periodic, full equipment deployment drills should be conducted to ensure that adequate vessels, port infrastructure support, the proper ship configurations, and trained crews are available when needed for a response.

### 4.3.1 Vessel Types/Functions

Conventional displacement vessels will be adequate in most situations for offshore support of ISB. They can handle large loads and can transit reasonably fast and in rough seas have average seakeeping abilities. Catamarans have an advantage of added roll stability and a larger deck area. Planing hulls are faster and can be used for lighter load situations where transit speed is important. Boom towing vessels must be able to tow and maneuver boom at slow sustained speeds as low as 0.5 knots without causing oil to entrain under the boom. This is often the most challenging function for a vessel since low speed control is difficult for many vessels, the clutch speed of which is very often several knots. Tow vessels also require sufficient horsepower to overcome the drag of large sweep systems. This drag dramatically increases in a current and for high-speed advancing systems. Sufficient deck space is required for storage of boom and other support equipment. Vessel cranes and winches are often required for deployment and maneuvering of heavy equipment. Safety zone enforcement vessels must keep other vessels away from the burn area and thus require more speed. Vessels that transport equipment must also be able to deploy it with cranes and winches in some cases. Boats may be used to deliver ignition devices into the contained oil and to monitor air quality downwind of the burn. Media representatives and visiting dignitaries also require transportation to the scene for short-term

visits. In some cases, ships will transport helicopters and function as landing pads, depending upon the proximity of land and airports. On-site management of the ISB operation is often assigned to a vessel as well.

### 4.3.2 Minimum Vessel Requirements

The minimum vessel attributes for offshore operations, presented in Table 12, are not absolute but should be used as a guide for effective and safe operation in the rough water offshore environment. Larger vessels are required when operating in unprotected offshore areas and during high wind/wave seasons. The horsepower required to tow boom varies greatly with the draft of the boom, speed of advance, boom sweep width, and catenary angle of the towline. In general, 1 horsepower is required for every 20 pounds of boom drag. Excellent communications are required between the ships, support aircraft and with the ICP to ensure effective coordination of resources. These requirements should be refined for the operating area and possible scenarios during the planning process and after exercises.

Table 12. Minimum vessel requirements for offshore ISB operations.

| Vessel Attribute | Vessel Type | | | |
|---|---|---|---|---|
| | **Boom Towing** | **Boom/Skimmer Deployment** | **Observation** | **Safety** |
| Length (ft) | 50 | 100 | 50 | 50 |
| Minimum Sustained Speed (knots) | 0.5* | 0.5* | NA | NA |
| Maximum Speed (knots) | 12 | 12 | 15 | 20 |
| Horsepower (hp) | 2,500 | 2,500 | Speed dependent | Speed dependent |
| Range (nm) | 6 X distance to operation area | 4 X distance to operation area | 6 X distance to operation area | 10 X distance to operation area |
| Endurance (hr) | 2 X normal operational requirements | 2 X normal operational requirements | 2 X normal operational requirements | 2 X normal operational requirements |
| Passenger Accommodations (people) | 3 | 5 | 10 | 2 |
| Deck Area ($ft^2$) | 100 | 400 | NA | NA |
| Crane | As required | 1 | NA | NA |
| Winch | 1 | 1 | NA | NA |

Declutching can be used to attain minimum towing speed, but this is taxing on the operator and equipment and will periodically cause loss of oil from the boom.

### 4.3.3 Desired Vessel Maneuvering Characteristics

One of the most important attributes of an effective boom tow vessel is its ability to maintain a sustained slow towing speed under load. Most commercial offshore supply vessels and tow boats are designed to transit and tow at speeds higher than those acceptable for oil containment. They typically have a minimum clutch speed of several knots, which would usually cause oil to entrain under the boom or possibly damage the boom. The operator must use only one propeller and constantly clutch in and out to maintain a slow towing speed. This makes maneuvering difficult, adds stress on the ship's drive train, fatigues the operator, and results in periodic loss of oil from the boom. Some ships are available with controllable pitch propellers or trolling reduction gears to maintain a low speed without constant clutching and declutching by the operator. Bow thrusters are also beneficial to assist with low speed maneuvering. A good speed indicator is also highly desirable to determine the actual speed at all times. Doppler, water wheel, or water pressure type speed sensor are preferred to Global Positioning System (GPS)-based systems because they provide the vessel's speed relative to the water (which is usually in motion due to currents) and not the speed over the ground. The relative speed of the boom to the water determines forces on the boom and the critical towing speed where oil entrainment starts and when gross loss occurs.

Desirable vessel characteristics include:

- Controllable Pitch Propeller (CPP) or Trolling Gear for 0.5 to 0.75 knot operations
- Bow thruster for low-speed maneuvering
- Accurate speed indicator (relative to the water) with bridge repeater

## 4.4 AIRCRAFT

Both the response to offshore spills and the use of the ISB with its short window of opportunity require speed. Environmental damage is minimized the faster the spill situation is assessed and the sooner proper resources arrive on scene. Aircraft play a key role in timely responses. Aircraft should be used to transport equipment and people to the scene if equipment cannot be pre-staged or if the spill is in a remote area. In some situations, helicopters can even be used to deploy anchors and boom. Surveillance aircraft assist both to evaluate the spill impact and to quickly select good recovery and burn sites. In support of ISB operations, aircraft are generally used to spot the spill, to ignite the oil, to carry monitoring equipment, and to assess the burn operation. They can provide live video links back to the command center to improve command and control. Unmanned aircraft are being used to a greater extent for military surveillance missions and they may be adaptable for ISB support.

Effective and safe use of aircraft also requires infrastructure. Airports with adequate runways and offloading equipment are required to support equipment deliveries. Offloading large equipment loads from transport aircraft such as a C-130 requires low-profile forklifts, lowboy trailers, or special off-loaders, which get under the tail section and line up the cargo bay ramp. Specialty aircraft with pontoons or boat hulls for water landings can be used where runways are not available. Helicopters can operate just about anywhere but they have lower speed, range, endurance, and payload carrying capabilities than fixed-wing aircraft.

### 4.4.1 Aircraft Types/Functions

**Fixed-Wing Aircraft** are used to transport heavy loads and large numbers of people. Knowing the cargo bay size and equipment packing requirements is important for planning purposes and efficient loading.

**Helicopters** are very useful for delivering light loads of people and equipment to remote locations. Equipment is often carried in a sling load beneath the aircraft. Since helicopters are very maneuverable and can hover in position, they can be used to deploy boom and anchors. A sample of the capabilities of the USCG helicopters and four representative commercial helicopters are provided in Table 13.

Table 13. Representative helicopter data.

| **Item** | **Bell Jet Ranger 206B3** | **Bell 212** | **Bell 412** | **American Eurocopter AS350** | **USCG Jayhawk *(HH 60)*** | **USCG Dolphin *(HH 65A)*** |
|---|---|---|---|---|---|---|
| Length (tip of rotor to tail) | 39 ft - 1 in | 57.25 ft | 56 ft | 42.45 ft | 65 ft | 44 ft – 5 in |
| Height (top of rotor head) | 9 ft – 7.5 in | 14.8 ft | 15.1 ft | 10.30 ft | 17 ft | 12 ft – 9 in |
| Width | 6 ft – 4 in (skids) | 9.25 ft (fuselage) | 9.3 ft (fuselage) | 26.5 ft | 8 ft (fuselage) | 10 ft – 6 in (at stabilizer) |
| Cargo Loading: (cabin) ($ft^3$) | 40 | 220 | 220 | 105.94 | 6,000 | 176 |
| (Baggage compartment) | 16 $ft^3$ | 28 $ft^3$ 400 lbs. | 28 $ft^3$ 400 lbs. | | | 88 $ft^3$ |
| Emergency Flotation | Installed | Installed | Installed | Installed | Installed | Installed |
| Rescue Hoist | NA | NA | NA | NA | Max. Permissible Load 600 lbs | Max. Permissible Load 600 lbs |
| Cargo Hook Limitations (lb) | NA | 5,000 | 4,500 | NA | Max. Permissible Load 6,000 | Max. Permissible Load 2,000 |
| Maximum Gross Weight (lb) | 3,200 | 11,200 | 11,900 | 5,512 | 21,884 | 9,200 |
| Endurance | Single Engine<br>3.0 hr (range extender)<br>2.5 hr normal op | Twin Engine<br>2.3 hr of operation | Twin Engine<br>3.7 hr of operation | Single Engine<br>3.2 hr of operation | Twin Engine<br>7 hr of operation | Twin Engine<br>3.5 hr of operation |
| Range (mi) | 240 | 225 (no reserve) | 402 (no reserve) | 414 | 700 | 150 |
| Crew/Passengers | 1/2 | 1/14 | 1/14 | 1/5 | 4/6 | |

**Unmanned Aerial Vehicles (UAVs)** could be used to obtain airborne video and infrared (IR) imagery of a spill site. They require a trained crew to launch, operate, and recover. Images are transmitted back to the command post where they can be seen in real time. They have been used to collect data in smoke plumes to support research and air-quality monitoring. The Norwegians have used tethered aerostats for video/IR surveillance during oil-in-water drills in the North Sea. UAVs are less expensive than manned aircraft and can be easily transported to the spill site by truck or car; however, they have not been used in actual spill operations. Additional UAV sources are listed on a web site in the Internet Reference section under the "Other Links" category.

### 4.4.2 Minimum Aircraft Requirements

Aircraft must have adequate communications equipment for coordination with the ICP, airport and ship task force(s). For safety reasons, twin-engine helicopters are recommended for Heli-torch operations. If a single-engine helicopter must be used, it should be equipped with floats to allow emergency landing on the water. When using more powerful twin-engine helicopters during ignition operations, the oil must be ignited from high enough above the slick to ensure that the down draft from the helicopter does not extinguish the burn. Maximum cargo weight capacities are determined by the aircraft capabilities. Carrying heavy loads may result in a shorter endurance and range. The proper aircraft and loading configuration should be selected to obtain the optimum load to meet the requirements.

### 4.4.3 Desired Aircraft Characteristics

Aircraft that exceed payload, range, and endurance requirements are desirable because they will provide an additional safety margin and more mission flexibility. Aircraft with wings above its windows provide greater visibility for observations. Video downlink capabilities to the ICP help communicate what is going on in real time.

## 4.5 RECOVERY EQUIPMENT

Skimmers or other recovery devices may be required in ISB operations to recover unburned viscous oil and residue after the burn. Burn residue is usually extremely viscous or solidified (except distillate fuel) to the point that manual tending with small boats and rakes may be required. It does not have to be recovered after every burn.

### 4.5.1 Skimmers

If skimmers are used, their pump or gravity-feed system must be able to process and discharge tar-like viscous oil or burn residue. They must be able to generate high discharge pressure to push the viscous product through the discharge hose. Consideration must also be given to the hose diameter and length to improve the oil recovery rate. Larger diameter hose (4 to 6 inches) and shorter hose runs are desirable to reduce the pressure head.

#### 4.5.1.1 Minimum Skimmer Requirements

Viscous oil skimming requires a positive displacement pump unless it feeds directly into the storage container by gravity. The minimum pump capacity is 50 gpm with a discharge pressure of at least 100 psi. Positive displacement pumps are not required for the trawl nets, manual tending and most trash handling boats, but consolidated burn residue may require a small crane for lifting bags or the net "cod end."

#### 4.5.1.2 Desired Skimmer Characteristics

Because the burn residue may solidify, it is useful to have an advancing skimmer, or one that induces a current to assist with oil collection. Static skimmers may require personnel to push or pull the viscous oil into the collection hopper with rakes. This can also be accomplished with an advancing containment system. Desirable skimmer pump capabilities are a discharge rate of 200 gpm or more, at a 125 psi discharge head or greater. The pump should have cutting blades to handle debris and to process solidified oil residue. Skimmer discharge hose of four inches or more with matching hose diameter will reduce discharge pressure and improve the pumping rate. Weir skimmers that have a self-adjusting floating weir lip are helpful to reduce water intake. In some cases water collected with viscous oil will help "lubricate" the discharge hose to reduce the pressure head and improve the oil-pumping rate. The USCG has successfully tested a device that creates an annulus of water around the oil on the discharge side of the pump to promote a lubrication effect in a more controlled fashion (Loesch et al. 2001).

### 4.5.2 Other Recovery Equipment

If the residue has completely solidified into large pancakes, an alternative collection method may be required. This could include boats/barges, which are used to collect debris and are commonly used in large city harbors. There are net-trawl systems designed for heavy weathered oil or tar ball recovery; these can also be used to collect viscous and solidified burn residue. In these situations, open-top barges may be required to hold the recovered residue. Heavy-ply plastic sheets or bags to wrap solidified residue should be used to prevent leakage if the residue is placed on open deck areas. This will prevent oil from oozing out on deck and dripping during the offloading and transporting process. Other decontamination supplies, such as wipes and sorbent pads, will be required when the skimmer is retrieved.

# 5. SAFETY AND RISK

Any attempt to ignite and sustain combustion safely, effectively, and with minimal disturbance to other spill response operations must include an assessment of:

- Local meteorological conditions and forecasts
- Burn location and its proximity to: the spill source; other potentially ignitable oil slicks; shorelines; man-made structures; population centers; airports; roads; sensitive biological resources; vessels; and other ongoing response operations

It is essential that burning be considered only if it can be accomplished at a safe distance from the spill source and any free-floating, potentially ignitable oil slicks. The safe distance should be confirmed by the use of portable combustible gas detection meters to detect flammable vapor concentrations. In calm conditions (winds less than 1 knot), burning should not be considered in close proximity to a flammable spill source. Under all conditions, consideration must be given to the possibility of wind shifts.

For a safe ISB to take place, it is important that the location and timing of ignitions be established and thoroughly understood by all response personnel in the area. It must be possible to identify and communicate to all responders the zones which have been selected as acceptable burn areas and the specific areas where ignition and sustained burning operations will not be permitted. The nature of the spill and its slicks, the weather conditions, and the reliability of communications and spotter aircraft should all be considered carefully in establishing a well understood and clearly defined burn plan.

The potential exposure of human and environmental resources to the effects of burning oil slicks should always be given high priority before the initiation of a burn. The burn must be completed without exposing people, equipment, facilities, and marine mammals to harmful levels of flames or heat. Care must also be taken not to expose local residents to excessive levels of smoke particulate. If some unexpected condition (e.g., a wind shift or vessel power failure) requires the early termination of an ongoing burn, personnel must be familiar with the appropriate procedures, and there must always be ample maneuvering room to complete such operations.

## 5.1 ENVIRONMENTAL IMPACTS

This section describes the main threats to the environment associated with ISB. The environment may be put at risk by the flames and heat from the burn, the emissions generated by the fire and the residual material left on the surface after the fire extinguishes. Nesting birds and mammals could be disturbed by the operations supporting ISB; however, the same disturbances would occur with conventional response operations. Based on many detailed ecological risk evaluations previously conducted for numerous scenarios, the preferred decision would be to burn an oil spill, rather than not to burn it (Buist, et al, 1994). ISB and any other at-sea oil removal process will greatly reduce the ecological effect of oil impact on the shoreline, which is a more sensitive marine ecosystem. In addition, shoreline cleanup costs are on the order of 10 times more expensive than at-sea recovery operations for the same volume of oil.

To fully evaluate the risks and benefits of ISB, an understanding of the environmental effects of oil not removed from the water is essential in the decision making process. A brief summary of both the potential effects of oil spills on living environmental resources and the exposure conditions causing these effects is provided in Appendix F. The smoke plume is always a major public concern; however, the impacts can always be reduced or avoided with good planning and proper public notification.

### 5.1.1 Smoke

The black smoke plume generated by ISB is likely to be highly visible from miles away. Despite public concern, the likely environmental impacts of the smoke are low. Although the plume contains combustion gases (mainly $CO_2$), carbon particles, and some unburned hydrocarbons (including small concentrations of polyaromatic hydrocarbons (PAHs)), the concentrations of these gases and particles quickly dilute to levels below environmental concern. The key component of the smoke plume is the particulate matter. An in-situ fire will yield about 5 to 15 percent of the mass of the oil burned as smoke particles. Case studies of accidental fires in major tanker spills have resulted in little or no lasting environmental impact from the smoke plume. Even the massive, long-lasting Kuwait oil fires of 1991 did not appear to have caused any lasting environmental impact.

Based on very limited experience, birds and mammals are more capable of handling the temporary smoke plume than they are an oil slick. Birds flying in a smoke plume could become disoriented and suffer toxic effects; however, this risk is believed to be minimal when compared to oil coating and ingestion. The effects of ISB on marine mammals have yet to be observed; however, the effects of smoke on mammals are likely to be minimal, compared to the effects of contact with unburned oil.

### 5.1.2 Burn Residue

As a general rule of thumb, the residue from an efficient burn of crude oil on water is environmentally inert. More specifically, the potential environmental impacts of burn residues are related to their physical properties, chemical constituents and tendency to float or submerge. Correlation between the densities of laboratory-generated burn residues and oil properties predict that burn residues will submerge in sea water when the burned oils have:

- Initial density greater than 0.865 g/cm$^3$ (API gravity less than about 32 °F) or
- Weight percent distillation residue (at >1000 °F) is greater than 18.6 percent

Burn residues submerge only after cooling. Based on modeling the heat transfer, it is likely that the temperature of a 0.25-inch thick burn residue will reach that of ambient water within approximately 20 to 30 minutes. Even for thicker slicks, it is likely that this cooling would occur within approximately 2 hours (API, 2002).

Physical properties of burn residues depend on burn efficiency and oil type. Efficient burns of heavier crudes generate brittle, solid residues (like peanut brittle). Residues from efficient burns of other crudes are described as semi-solid (like cold roofing tar). Inefficient burns generate mixtures of unburned oil, burned residues and soot that are sticky, taffy-like or liquid. Burns of

light, distilled fuels result in a residue that is similar to the original fuel but contains precipitated soot.

Chemical analyses of crude oil burn residues show relative enrichment in metals and the higher-molecular weight PAHs, which have high chronic toxicity but are thought to have low bioavailability in the residue matrix. Bioassays with water from laboratory- and field-generated burn residues of crude oil showed little or no acute toxicity to marine life.

Localized smothering of benthic habitats and fouling of fishnets and pens may be the most significant concern when semi-solid or semi-liquid residues submerge. All residues -- whether they float or submerge -- could be ingested by fish, birds, mammals, and other organisms and may be a source for fouling of gills, feathers, fur, or baleen; however, these impacts would be expected to be much less severe than those manifested by exposure to a large, unconstrained oil spill.

### 5.1.3 Fire

While heat from the flames is radiated downward as well as outward, much of the heat that is radiated downward is absorbed by the oil slick. Most of this energy vaporizes the hydrocarbons for further burning, but a portion of the heat is transmitted to the underlying water. In a towed-boom or in a stationary boom situation in current, the water under the slick does not remain in contact with the slick long enough to be heated appreciably; however, under static conditions (the slick does not move relative to the underlying water), the upper few inches of the underlying water is heated in the latter stages of the burn. In a prolonged static burn, the upper few millimeters of the water column can be heated to near boiling temperatures, but the water several inches below the slick is normally heated only a few degrees for burns lasting 1 to 2 hours. The Alaska RRT recognizes that this heating can eliminate the small life forms that exist in the surface layer of water, but they concluded that the areas involved are small and that the lost biota will quickly be replaced, with negligible overall impact (Alaska RRT Unified Plan, Annex F, 2001). The conclusion is that the environmental impact of the heat from an ISB is negligible.

## 5.2 RESPONSE PERSONNEL

This section describes guidelines for dealing with the potential hazards to response personnel involved in an ISB operation. This will include establishing safe zones in which to carry out the burn, establishing a site safety plan, and employing safe working practices for the various aspects of an ISB operation.

### 5.2.1 Site Safety Plan (SSP)

A comprehensive SSP must be prepared prior to the operation, recognizing the unique elements of both ISB in general and the planned operation specifically. As in spill response operations, safety is the top priority. All personnel involved must understand their respective roles in the operation. They must also understand the elements of the SSP and that they are responsible for their own safety and for the safety of their co-workers.

The key elements of a site safety plan are:

- Site description, including distance to shore and sensitive areas
- Current and forecast weather, and sea conditions
- Hazard evaluation
- Safe working distances
- Burn operations checklist
- Means for controlling access to the burn site
- Communications procedures
- Specific safety requirements and personal protective equipment
- Emergency response procedures
- Prevention of unwanted fires
- Methods for controlling and/or extinguishing the burn

### 5.2.2 Safety Zone Guidelines

Establishing a safety zone(s) involves defining areas that are acceptable for burning operations. Furthermore, the guidelines also need to specify areas where ignition and sustained burning operations will not be permitted. The safety zone(s) must be established with consideration for the key hazards for personnel involved in an ISB response:

- Flashback during ignition
- Risk of secondary or unintentional fires
- Heat from the fire
- Exposure to smoke emissions

**Flashback during ignition** is a potential hazard when dealing with volatile fuels such as gasoline and fresh crude oil. These products produce sufficient vapors to allow flames to spread as fast as 300 feet/second (200 knots). For crude oils, this risk quickly diminishes over time as the oil weathers and loses its volatile components to the atmosphere. Monitoring with combustible gas detectors should be employed on each vessel involved in the burn operation to confirm that explosive atmospheres are not present prior to any consideration of igniting the slick.

**Secondary or unintentional fires** are possible when slicks are thick enough to support combustion, even when they are not contained by boom. For vessels involved in towing containment boom, adequate lengths of towing line (200 to 500 feet each) will allow a safe operating distance between the vessel and accumulated oil. Spotter aircraft should be used to direct these vessels to ensure that they do not enter other slicks in the area that may be thick enough to support combustion.

Guidelines for maintaining a safe distance in order to **avoid heat from the fire** are presented in Table 14, based as multiples of the estimated diameter of the burning slick. The risk of **exposure to smoke emissions** should be minimal or non-existent by ensuring that all vessels are positioned upwind or crosswind to the target slicks prior to ignition and during the burn. Using a crosswind configuration will ensure that a crippled tow vessel will not drift back into the burn.

Table 14. Safe working distances from the fire.

| Exposure Time | Distance from Fire (burn area diameters) |
|---|---|
| Infinite | 4 |
| 30 minutes | 3 |
| 5 minutes | 2 |

For each of these potential hazards, consideration should be given to both existing and forecast wind and sea conditions. Throughout the burn, conditions must be closely monitored to allow for an ongoing assessment of the effectiveness of the burn plan and of the safety issues. Surveillance will be required to monitor the overall oil conditions in the area and in particular, the location of thick slicks that should be avoided by tow vessels.

Two surveillance tactics should be considered; aerial surveillance and surveillance from a larger vessel. The increased visibility from aircraft, particularly helicopters, ensures the safety of the ISB operation; however, a larger vessel not only provides a good view of the tow operation from the surface but also can be equipped with extra fire monitors for firefighting capability. This capability would be in place in case of an accidental vessel fire; it is extremely difficult to position a vessel close enough to a fully involved ISB to extinguish the fire. This large vessel could also provide a means of rescue if one of the tow vessels should experience difficulties.

### 5.2.3 Safe Practices

#### 5.2.3.1 Vessels

Personnel on vessels involved in tow operations may be exposed to heat, flames, and smoke if the fire should move up the boom. This could occur if thick patches of oil are encountered and the flame spreads along this thicker patch. The flame-spreading velocity is normally only a few feet per minute (less than 0.3 knots), so the flames will not spread toward the tow vessels if the boom is moving in an upwind direction. Because winds can change rapidly, however, this fact should not be taken as an assurance of safety. In highly variable winds, caution must be taken to ensure that thick concentrations of oil are not encountered at low boom-tow speeds (less than 0.5 knots).

Any crews working alongside the burn could be exposed to high concentrations of particulate matter, PAHs and volatile organic compounds (VOCs) if the wind changes and blows toward them. For this reason, operational vessels should not operate behind the tow boat positions.

Interference with other vessels may be a concern with operations involving multiple deployments. The burn plan should address this, recognizing safe distances between vessels and allowing for potential shifts in the wind and currents. Spotter aircraft should be used to direct operations and to identify areas of thick oil in the path of tow vessels.

In addition, actively cooled booms use hoses to supply water to the boom, and these hoses present an additional entanglement hazard for vessels. Care must be taken during towing operations to avoid backing down on tow lines and hoses.

#### 5.2.3.2 Boom Handling

Fire-resistant booms are generally much heavier and more cumbersome than conventional containment booms and, in some cases; they are less rugged than conventional booms. These factors may present additional difficulties to those directly involved in boom deployment and retrieval. Additional care should be taken when lifting the boom, when in the area of the boom under tension and when overhead work is involved.

Retrieval of the boom following a burn may be difficult, particularly for booms made of refractory fabric, as the fabric may be waterlogged and damaged from the effects of the fire. Retrieval will also be messy, as the boom may be covered with unburned oil and tar-like residue. Workers should wear protective gear with neoprene gloves, rubber boots, and goggles. Cuffs should be taped with duct tape. Cleaning personnel require appropriate decontamination materials to use after the work is completed. Sorbent materials, rags, paper and fabric towels, citrus cleaners, soap and warm water, hand cream, garbage bags and containers should all be available onboard the vessel. Any cleaning materials used should be collected after the burn for proper disposal.

#### 5.2.3.3 Fire Control

The methods below may allow for some control over the burn area and burn rate, but it will be difficult, if not impossible, to quickly extinguish a large oil fire on the water. The overriding safety philosophy in preparing for an ISB operation must be the assumption that, once the slick is ignited, it cannot be quickly put out until it burns itself out.

The primary method of fire control will be to manage the containment operation effectively. If the towing speed is too slow, the oil and, therefore, the fire will slowly spread toward the towing vessels. This can also occur if oil is encountered at a rate greater than the burning rate. Continuous monitoring of the burn area is required to assess the need for adjusting the course and the tow speed as well as to determine the potential need for extinguishing the burn.

Oil will be lost from the boom apex due to entrainment under the boom at excessive tow speed or over the top of the boom in rough seas. In some cases, the oil may continue to burn, or may be re-ignited by the contained fire but in most situations will extinguish quickly if the losses are small.

For the main burn area, extinguishment may not be immediate. Several control methods have been suggested but have not been proven in experimental or operational use. One proposed method is to release one end of the boom tow, allowing the burning oil to spread out until it is

too thin to support combustion. The second proposed method is to increase the tow speed to greater than 1 knot, causing the oil to entrain under the boom. In both of these methods, the fire may not extinguish immediately, particularly if the slick is relatively thick to start with. As neither method has been proven, caution is advised in including them as a primary method of control.

Depending on the scale of the intended burn, consideration should be given to a dedicated fire extinguishing capacity stationed at the burn site. This would consist of fire monitors of sufficient capacity to break up uncontained, burning slicks. In any case, small fire-fighting packages should be available on all vessels.

#### 5.2.3.4 Aircraft

All aircraft associated with an ISB operation should be chosen carefully to suit the required tasks. Flight plans should be prepared with due consideration of current and forecast conditions of the wind, visibility, cloud types and height, fog, precipitation, and sea state.

For Heli-torch operations, the helicopter must have sufficient lift capacity for the pilot, co-pilot, the Heli-torch system, and a full load of fuel. It must have a cargo hook suitable for a sling load and the ability to jettison if necessary. The jettison mechanism should be tested before each mission. A twin-engine helicopter should be selected for operations over water. If a single-engine helicopter must be used, it must be equipped with floats to facilitate emergency landings.

Only the pilot, co-pilot, and Heli-torch operator should ride in the helicopter during the Heli-torch operation. Follow aircraft procedures for use of personal flotation devices (PFDs) or survival suits. During nearshore operations, updraft and downdraft winds against cliffs must be considered when transiting these areas. In case of mechanical difficulty, emergency landing locations for the helicopter should be identified in advance through site surveillance. These sites may include landing decks on vessels, drilling rigs, or barges.

#### 5.2.3.5 Igniter Operations

Handheld igniters should have a delay mechanism that postpones the ignition of the device for at least 10 seconds from the time of activation. This delay allows time to activate and throw the device as well as for the slick to stabilize around the igniter after the splash. A longer activation delay is required if the device is deployed upstream of the boomed area and allowed to drift into the slick. Devices intended for deployment from a helicopter should not require the use of open flames or sparks.

For Heli-torch systems, specific helicopter safety precautions must be followed. Additional precautions specific to the Heli-torch are included in operating manuals for the device and are addressed in comprehensive training for Heli-torch operation. The following is a summary of the key safety issues and is not intended to replace the specified training requirement. Additional Heli-torch and other igniter information are provided in Appendix G.

- Only trained persons shall be involved in the Heli-torch operation
- Mixing and moving procedures of fuel must consider its volatile nature
  - Use proper grounding procedures to prevent static discharge
  - Non-sparking pumps and tools must be used
- Employ additional precautions for shipboard operations
  - Follow ship and aircraft safety requirements for landing and fire fighting crews
  - Establish safe procedures for attaching and removing the Heli-torch system to the helicopter before operations
- Transit speed of the helicopter should not exceed 50 knots
- Conduct a test drop of a small amount of ignited gelled fuel in an approved area away from the oil slicks before the ignition operation to ensure proper operation of the Heli-torch
- Approach the burn site from an upwind or crosswind position or perpendicular to towing vessel

### 5.2.4 Personal Protective Equipment Considerations

Appropriate personal protective equipment (PPE) must be worn by all personnel involved in the ISB operation. PPE includes: safety boots, hard hats, goggles, neoprene gloves, life jackets, chemical-resistant clothing, and foul-weather gear.

Heli-torch personnel are not directly exposed to the dangers of the burn operations other than being exposed to the small amounts of vapors from the fuel used for gelling and the dust from the gelling agent. If necessary, breathing protection can be used to minimize this exposure. The Heli-torch operator in the helicopter is not physically exposed to any dangers other than those normally associated with flying.

## 5.3 PUBLIC HEALTH AND SAFETY

### 5.3.1 Identification of Potential Public Health and Safety Concerns

Smoke plumes can cause temporary reductions in aesthetic values in local human use activities. Humans may also be put at risk by:

- Flames and heat from the burn
- Emissions generated by the fire
- Inhalation of smoke particulate in the plume
- Reduction in visibility caused by the smoke plume
- Risk of secondary fires

#### 5.3.1.1 Plume Particulate Exposure

The smoke plume emitted by a burning oil slick on water is the main ISB concern. The concentrations of smoke particles are of concern to the public and they can persist for a few miles downwind of an ISB but rarely at ground level. The smoke plume is composed primarily of small carbon particles and combustion gases. Smoke particles pose the greatest risk in a plume. Carbon smoke particles are responsible for providing the characteristic black color of the plume rising from a burn. The smoke is unsightly, but more important, the smoke particles can cause severe health problems if inhaled in high concentrations. Smoke particulates and gases, however, are quickly diluted to below levels of concern. The amounts of PAHs in the smoke plume are also below levels of concern. Approximately 5 to 15 percent, by weight, of the oil burned is emitted as smoke particles.

Smoke particles are tiny specks of unburned carbon, and they vary greatly in size. From a human health perspective, the focus is on those particles that are small enough to be inhaled into the lungs, i.e., those smaller than 10 microns in diameter (1 micron = 1 micrometer = 0.00004 inches). These are referred to as PM-10s (PM stands for "particulate matter"), which make up approximately 90 percent of the mass of particulate emitted from an ISB. The only national exposure standard that exists for PM-10s is the National Ambient Air Quality Standard (NAAQS), which states that PM-10 exposures of more than 150 micrograms per cubic meter ($\mu g/m^3$) averaged over a 24-hour time period can cause mild aggravation of symptoms in persons with existing respiratory or cardiac conditions and irritation symptoms in the healthy population. The NAAQS standard allows for concentrations to exceed 150 $\mu g/m^3$ for hours at a time as long as the 24-hour average meets the standard; however, the National Response Team (NRT), in the absence of any data, agreed to adopt a more conservative standard, requiring that concentrations averaged over <u>1 hour</u> should not exceed 150 $\mu g/m^3$. In 1997, the USEPA decided to add a PM-2.5 standard to the NAAQS. PM 2.5's make up approximately 55 percent of the particles emitted from an ISB. The PM-2.5 standard threshold is 65 $\mu g/m^3$ averaged over 24 hours. Some regions (specifically the Alaska RRT) have modified their ISB acceptance criteria on the basis of the PM-2.5 standard, using the same conservative 1-hour exposure basis as the NRT recommends for the PM-10 standard.

Particulate concentrations in the plume are greatest at the burn site and decrease with increasing distance from the burn site, primarily through dilution, dispersion, fallout, and also through washing out by rain and snow. Concentrations of PM-10 in a smoke plume are not easy to predict accurately because they are a function of many factors including soot yield, fire size, burn efficiency, distance downwind from the burn, terrain features, and atmospheric conditions (e.g., wind speed). The procedure adopted by the NRT to ensure smoke concentrations do not exceed the standard at downwind, populated areas is to conduct real-time monitoring of the plume. This is discussed in more detail in Section 5.4 below and in Appendix H. If this monitoring is not possible, the NRT also allows for smoke plume trajectory models, with a safety factor applied, to be used to determine safe distances. Both NIST and NOAA have developed models to predict downwind smoke concentrations. These are sophisticated tools that require detailed spill and meteorological inputs and should be run by experts only. Access to these models is obtained through the Scientific Support Coordinator (SSC). As an interim planning measure, general examples can be used as guides. NIST has developed a simple technique for roughly estimating the maximum distance downwind over flat or complex terrain for the

concentration of soot in plumes from ISBs to dilute and disperse below a given concentration. The distance beyond which the soot concentration falls below a given level depends mainly on the terrain height and the mixing layer depth relative to the elevation of the burn site, with wind speed being the next most important factor. Table 15 provides estimates for the maximum downwind extent for PM-10 Particulates to reach the 150 ug/m3 threshold level. Values are provided for two fire sizes by area (5,000 and 10,000 $ft^2$), and four ranges of terrain height. Maximum downwind extent values are further delineated for fire ranges of mixing layer depth. The values in Table 15 assure a wind speed range of 2 to 25 knots.

Table 15. Estimates for maximum downwind extent of PM-10 particulates*.

| **Fire Size ($ft^2$)** | **Terrain Height (ft)** | **Maximum Distance (nautical miles) Downwind for PM-10 Concentration to Reach 150 μg/$m^3$ at Ground Level for Given Mixing Layer Depth Ranges**** | | | | |
|---|---|---|---|---|---|---|
| | | **0 to 350 ft** | **351 to 825 ft** | **826 to 1,650 ft** | **1,651 to 3,300 ft** | **>3,300ft** |
| 5,000 | 0 to 80 (Flat) | 2 | 2 | 1.5 | 1 | 0.5 |
| | 80 to 825 | 4 | 3.5 | 2.5 | 2 | 1 |
| | 825 to 1,650 | 6.5 | 5 | 4 | 3.5 | 2 |
| | > 1,650 | 8.5 | 7.5 | 6.5 | 5 | 4 |
| 10,000 | 0 to 80 (Flat) | 2.5 | 2 | 1.5 | 1 | 0.5 |
| | 80 to 825 | 5 | 4 | 3 | 2 | 1.5 |
| | 825 to 1,650 | 8 | 6 | 5 | 4 | 2.5 |
| | > 1,650 | 10 | 9 | 8 | 6 | 5 |

* Valid for wind speeds from 2 to 25 knots.

** Mixing layer depths loosely correspond to atmospheric stability class ranges as follows: Stability Class C ≈ 660 to 1,000 ft; Stability Class D ≈ 500 to 660 ft.

If the plume passes over highly elevated terrain, the distances for the ground-level concentrations of PM-10 to decrease below 150 μg/$m^3$ are much greater than over flat terrain in equivalent meteorological conditions. The distance downwind for the smoke plume to dilute below 150 μg/$m^3$ would range from 0.5 nautical miles over flat terrain in a highly mixed atmosphere to 10 nautical miles over mountainous terrain in a very stable atmosphere. Low mixing-layer depths generally only occur at night.

If the 65 μg/$m^3$ PM-2.5 criterion is to be applied, the mathematics of the NIST model show that the distances predicted in Table 15 should be increased by 1.5 nautical miles.

The atmosphere over water is generally less well mixed than over land and a good rule of thumb is it takes about twice the distance over water to achieve the same decrease in smoke plume concentrations as it does over land, using the "Flat" terrain height category**. Mixing zone heights over large bodies of water are usually in the range of 500 to 1,000 feet.**

#### 5.3.1.2 Proximity to Shorelines, Towns, Airports, etc.

Smoke plumes are also of concern because they obstruct visibility, and may pose a safety hazard to operators of ships, aircraft, and motor vehicles in the immediate vicinity and downwind of the fire. The visibility reduction is caused primarily by light scattering from the smaller smoke particles, in the 0.3 to 0.6 micron size range. A rough estimate of the visibility in a smoke plume (measured in statute miles) is 700 divided by the concentration of particulate in $\mu g/m^3$. For a concentration of 150 $\mu g/m^3$, the visibility will be about 5 miles; in a plume with a concentration of 500 $\mu g/m^3$, the visibility will be reduced to about 1 mile. It is unlikely that serious visibility effects will be caused at ground level if the appropriate upwind separation distances for PM-10 are maintained.

The smoke plume may also cause limited spatial and temporal aesthetic impacts. Even though the concentrations of particulate in the smoke plume are well below levels of concern, they can still be detected by the human nose and may cause concern in the public.

#### 5.3.1.3 Traffic Control

The smoke plume may require changes in air traffic routing and the imposition of an aircraft exclusion zone through a Notice to Aviators. Human use activities, such as fishing (commercial and sport), recreation, and tourism, may be temporarily affected by both the smoke plume and any requirements for safety zones around ISB operations implemented through a Notice to Mariners and the use of enforcement vessels. Local police should also be notified of possible visibility reductions on public roads and highways.

### 5.3.2 Coordination with Local Authorities

Coordination with public health and safety officials of local government agencies that will be affected by ISB operations is critical to ensuring a safe and successful ISB operation. These agencies are often not completely aware of ISB technology, and they have concerns for the health and welfare of their constituents who might come in contact with the ISB operations or smoke plume. Getting the agency representatives involved as soon as ISB is considered as a response option is a prudent action to take. The ICS/UC should seek out local expertise on health and safety issues through the Liaison Officer and assign them to appropriate positions on the ICS/UC.

### 5.3.3 Establishment of Exclusion and Safety Zones (Air, Land, and Water)

Appropriate exclusion, safety, and traffic control zones must be established in the vicinity of and prior to ISB operations to provide for the safety of recreational boaters, commercial maritime activities, the media covering response activities, and the general public. These zones should be considered for the land, water, and air space that are likely to be impacted by the smoke plume and waterborne operations.

Air Exclusion Zones are established and enforced by the Federal Aviation Administration (FAA). A request for an appropriately sized Air Exclusion Zone should be coordinated with the local FAA representative in accordance with locally established procedures.

Exclusion Zones on land are the responsibility of local government authorities but they will not usually be needed for ISBs beyond three nautical miles. Establishment of appropriate zones should be coordinated with agency representatives on the ICS/UC or through the Liaison Officer if local representation is not present on the ICS/UC.

Safety Zones on the water are the responsibility of the USCG Captain of the Port (COTP). Appropriate safety zones should be established, announced to the public through established means, and enforced if there is reason to expect that individuals may not comply with the Safety Zone provisions. Procedures for establishing Safety Zones are delineated in federal regulations and USCG unit instructions.

### 5.3.4 Notification and Public Education

It is essential that the public be notified during the planning phase of an ISB operation. An informed public is more likely to support the operation. The purpose of the burn, the net environmental benefits of ISB compared with other alternatives, and the safety precautions that are in place to protect the public, the responders, and the environment must be communicated to the public.

Since ISB operations, especially when viewed from a distance, may be mistaken for a fire on a vessel, structure, or woodland, it is imperative to ensure that all surrounding communities are alerted to the planned burn. Participating agencies in the ICS/UC should be tasked to help identify potentially impacted communities to be alerted about the planned ISB operations.

Notification and public education can be accomplished through several means, including press releases, press conferences, public meetings, notice to mariners, notice to aviators, and radio broadcasts. The RRT should work with the public before the burn operation to educate them and hear their concerns. At several recent major incident responses, incident Internet Web sites were developed. They are an excellent method to educate the public and provide appropriate response information. More detail is provided in Appendix A, Section A.4 on press public notifications and community outreach meetings.

## 5.4 SAMPLING/MONITORING EQUIPMENT (SMART)

Appendix H lists the requirements for the Special Monitoring of Applied Response Technologies (SMART) sampling protocols. SMART relies on small, highly mobile teams that collect real-time data using portable, rugged, and easy-to-use air monitoring instruments during ISB operations. Data are provided to address the critical question: Are smoke particulate concentration trends at sensitive locations exceeding the level of concern? SMART is implemented when there is a concern that the general public may be exposed to smoke from ISB. SMART is not required when impacts are not anticipated. SMART is not a regulatory requirement. It is an option available to the Unified Command to assist in decision-making and management of the ISB operations. The National Strike Force has SMART monitoring equipment and can usually support such monitoring requests. While every effort should be made to implement SMART in a timely manner, ISB operations should not be delayed to allow deployment of the SMART teams

For ISB operations, SMART recommends deploying one or more monitoring teams downwind of the burn, at sensitive locations, such as population centers. Particulate monitoring for ISB is done when there is concern that the smoke plume may impact a sensitive location, such as a town. In general, monitoring is done upwind of this location to minimize interferences from cars, industry, and homes. The teams begin sampling before the burn begins to collect background data. After the burn starts, the teams continue sampling for particulate concentration trends, recording them both manually at fixed intervals and automatically in the data logger. They report to the Unified Command through the established response management organization's chain of command and procedures.

# 6. BURN OPERATIONS

## 6.1 ORGANIZATION

ISB operations may be only one of several tactical operations that are conducted simultaneously during an oil spill incident response. For safe and effective ISB operations to occur, the personnel and equipment resources must be organized and closely coordinated with the other tactical operations underway in the incident area.

### 6.1.1 ISB Specific Considerations (NIIMS/ICS)

In 1996, the USCG adopted the National Interagency Incident Management System (NIIMS) format of the Incident Command System (ICS) to respond to pollution incidents. Most other federal government agencies, state government agencies, and industry have also adopted ICS, and it has become an unofficial standard for response. Accordingly, since that time, all major responses have been organized by the principles of ICS and managed through a Unified Command Structure; however, some local governments may not be familiar with ICS.

Most area committees (AC) in those regions that have ISB pre-approval mechanisms in place have developed sections in their ACPs which address the use of ISB technology. An Operations (or Burn) Plan, prepared to address the specifics of each incident, is required. This plan is usually prepared by the Planning Section (in the Environmental Unit if one has been established) with major input from Operations Section personnel. A Response Technologies Specialist, well versed in ISB technology, should be identified and assigned within the Planning Section to lead the development of the Operations Plan.

Since time is of the essence for effective ISB operations, the tactical resources that are needed to conduct the operations should be identified early in the ISB planning, and those requirements made known to the Resource Unit. During the pre-planning process, long lead-time resources or resources requiring negotiated contracts should be identified, and mechanisms put into place to speed up their acquisition during a response. The Safety Officer is responsible for developing the Incident SSP. (It is also commonly called the Site Safety and Health Plan (SSHP)). Also, a special section or separate SSP should be developed for the ISB operations.

### 6.1.2 Organization of Tactical Resources

One of the ICS's guiding principles is a flexible organization and the operational organization can take any shape or form, according to some basic organizational principles, to best accomplish the objectives set by the UC. Since the conditions and parameters for every incident response are different, it is difficult to recommend a specific tactical organization that will be appropriate for all incidents. A sample representative ISB organization is provided in Figure 7.

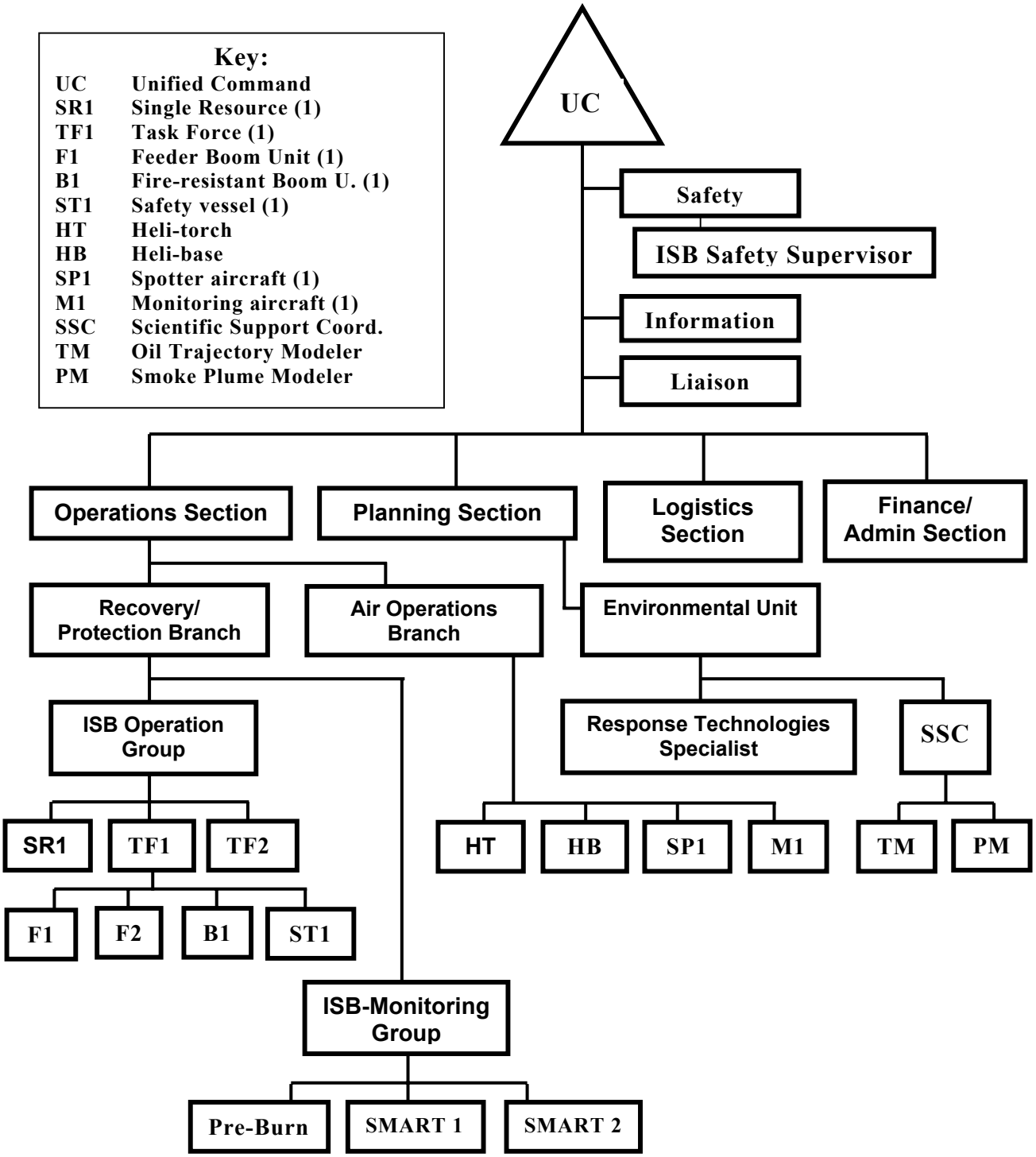


Figure 7. Representative response organization of ISB functions.

In general, the ISB operations tactical resources consist of single resources or task forces. Task forces are created to accomplish specific tasks (e.g., tow the fire-resistant boom within the designated burn area or transfer oil spillets from the main slick to the designated burn area). The type and number of resources required will depend on the amount of oil to be burned, the area available for ISB operations, and the number of resources available. These resources are usually organized into an ISB Operations Group that is supervised by an ISB Operations Group Supervisor. ICS span of control principles should always be followed when creating the ISB Operations Group. The ISB Operations Group Supervisor reports to either the Operations Section Chief or, if established for large responses, the Recovery and Protection Branch Director. If burn residue recovery is required, those assigned resources should be appropriately organized in the Operations Section.

All aircraft resources, including Heli-torch and monitoring helicopters, should be assigned to the Air Operations Branch and should support the ISB operations from that position in the organization.

### 6.1.3 Organization of SMART Resources

The SMART ISB Monitoring operations should also be an integral part of the ICS tactical organization. The monitoring resources are usually organized into teams, with the number of teams dependent on the size of the ISB operations and smoke plume. The teams are usually organized into an ISB Monitoring Group, supervised by an ISB Monitoring Group Supervisor. ICS span of control principles should always be followed when creating the ISB Monitoring Group. The ISB Monitoring Group Supervisor reports to either the Operations Section Chief or, if established for large responses, the Recovery and Protection Branch Director.

There are several options for organizing the ISB monitoring operations. For a small burn with minimal monitoring requirements, the Monitoring Team(s) can be organized to report directly to the ISB Operations Group Supervisor if the span of control limits is not exceeded. The ISB monitoring function can be conducted in the Planning Section If it is established, one of the Environmental Unit's responsibilities is to monitor the environmental consequences of the cleanup actions. Regardless of where the monitoring function resides in the organization, close communications are mandatory for efficient ISB monitoring and safe ISB operations.

## 6.2 COMMUNICATIONS

Constant reliable communications between all organizational elements and tactical resources are essential to have safe and effective ISB operations. The necessary communications for ISB operations should be both planned as an integral part of the overall incident communications and included in the Incident Communications Plan. The Communications Plan should address, at a minimum, communications equipment, frequencies, communications procedures/protocols.

The ISB Operations Group Supervisor should ensure that proper communication procedures are followed to minimize the opportunity for incorrect or inappropriate actions by ISB Operations Group resources and other responders. The Supervisor should also ensure that the Unified Command is kept informed of ISB operations through the chain of command.

### 6.2.1 Importance of Communications to Safe and Successful Operations

Successful ISB operations require coordinated communications between several key organizational elements. The vessels towing the fire-resistant boom must remain in constant communication to maintain a proper boom shape. Reliable communications between the spotter aircraft and the control vessel are necessary to assist in directing the Heli-torch to the proper location in the slick during the ignition process. If multiple task forces are assigned, communications between the fire-resistant boom task force and feeder task force(s) are needed to ensure that an adequate supply of oil is provided to sustain the burn.

Potential safety risks inherent to ISB operations can be mitigated through effective communications. All tactical elements must know that ISB operations are planned and when the critical activities will occur so they can take necessary precautions to ensure their safety. Emergency communications procedures must be clearly described in the SSP, Operations Plan, and Incident Action Plans. They must also be covered in detail during all Operational Period Briefings and shift change briefings. All responders must understand how to properly communicate a potential or actual safety emergency to ensure that it is promptly corrected.

### 6.2.2 Communications Plan Organization

The Communications Plan is an integral part of the Incident Action Plan for each Operational Period. The Communications Plan is usually developed at the beginning of the incident, based on the expected size and scope of the incident response. The plan should be reviewed during the planning for each successive Operational Period and modified as necessary to accomplish response objectives set to meet the changing incident conditions. For complex ISB operations, consideration should be given to developing an appendix to the Communications Plan that describes in detail the necessary communications for the planned ISB operations.

The Communications Plan consists, in its simplest form, of a Radio Communications Plan prepared on a standard ICS Form 205. In the plan, the established radio nets are delineated, radio frequencies for the nets are allocated, and equipment sources are described in general terms. The Radio Communications Plan is often augmented with a telephone communications plan that provides a telephone directory for both landline and cell phone numbers for key members of the ICS/UC.

Other attachments to the plan can include communications procedures (both general and those specific to the incident) and use of special communications capabilities, such as satellite and microwave communications, antenna and repeater systems, remote sensing, data communications, and E-mail. The Communications Plan should become more detailed and sophisticated for responses that are more complex.

### 6.2.3 Communications Equipment

Communications equipment selected should be capable of linking the key tactical elements involved in ISB operations with Command elements at the Incident Command Post. Very high frequency (VHF) and ultra-high frequency (UHF) radios are usually the equipment of choice. When ISB operations occur in areas where topographic features limit transmission ranges, elevated antenna systems and repeater stations should be installed to increase transmission

capabilities. Cellular telephones can be used, but their coverage is generally limited during offshore operations.

Because the Incident Command Post is usually located ashore and out of direct sight of the ISB operations, a real-time video link is desirable. During several recent ISB at-sea tests, remote-operated (by the helicopter crew), gyro-stabilized video cameras, commonly used by the news media for providing live reporting from the scene of incidents, were used and provided continuous feed real-time coverage of the ISB operations to the Incident Command Post. Use of real-time video permits the ICS/UC members, the key stakeholders who are not part of the ICS/UC, and the media the opportunity to view the operations from a safe location.

### 6.2.4 Frequencies

Radio frequency selection and allocation is an important function of the Communications Unit. For a small incident response, a single frequency assigned to the tactical operations network may be adequate. If ISB operations are planned, then the spill response is probably of such a magnitude that several frequencies should be assigned to properly control the various tactics underway. The ISB operations should be assigned a dedicated frequency(s).

The Radio Communications Plan should clearly delineate the channel(s) and frequency(s) to be used for ISB operations, the tactical resources that are permitted to use that network and any specific remarks that are pertinent to users of the network. Depending on the size of the tactical organization and the number of resources assigned, dedicated radio networks with specific frequencies should be considered for vessel-to-vessel, vessel-to command, vessel-to-air, and air-to-air communications.

### 6.2.5 Communications Procedures

Communications procedures include both the proper use of the communications equipment and the correct procedures when communicating on the equipment. Operational period briefings, daily shift change briefings, and supervisor briefings should all include a section on communications. Provide as much detail as necessary during the briefings to ensure that all resources involved in the ISB operations know how to use the equipment and the prescribed protocols for transmitting the information. It is important that all response personnel communicate as prescribed within the ICS/UC organization and chain of command to keep critical communications flowing freely and to minimize extraneous transmissions.

Effective communications must be maintained between the Operations Section Chief in the ICP and the ISB Operations Group Supervisor in the field, as well as between the ISB Operations Group Supervisor and the Task Force Leaders and single resources comprising the ISB Operations Group. In a similar manner, the ISB Monitoring Group Supervisor must maintain direct and constant communications up and down the chain of command. Communications schedules should be established between key members of the organization to be consistent with the nature of the operations conducted.

## 6.3 DECISION SUPPORT SYSTEMS

Decision Support Systems (DSSs) are computer programs that are used to track, process, analyze, and display information to facilitate decision making and report writing. They can be as simple as a spreadsheet or as complex as integrated databases and prediction models sharing information over a network or the Internet. The USCG has developed a prototype oil spill response DSS called the On-Scene Command and Control System ($OSC^2$). $OSC^2$ is a prototype system that is currently being implemented within the USCG as a part of the Marine Information for Safety and Law Enforcement (MISLE) response module. DSSs are designed to add value to existing information and streamline the data management and resource allocation process during a hectic oil spill response. The use of a DSS is recommended because ISB is very time critical and these tools will facilitate the decision making process. A DSS, however, is not a substitute for the Decision Guide published in Chapter 2.

### 6.3.1 Integration of Data

Information management is critical during a chaotic spill response. A DSS uses standard data input screens, which usually provide data-checking routines and eliminate the need to enter the same information more than once. The data are then shared between various databases and models. Input of data, and sometimes access to it, is limited to those who have the specific functional tasking and authorization, which is controlled through password protection. Functional tasking includes operations, planning, logistics, and finance. An automated time-line record is usually maintained for each action that is logged into the system. This procedure facilitates re-creation of the time sequence of major events and documentation of records and transactions for possible litigation. $OSC^2$ incorporates the ICS standard forms for both data entry and reporting to help standardize this process.

### 6.3.2 Allocation and Tracking of Resources

People and equipment (boom, aircraft, trucks, and boats) resources are not very helpful unless they are employed properly and efficiently. A DSS is useful in identifying where they are, their status, and to whom they are assigned. It can be used to make assignments and then track their status and location. Complex shift changes can be organized easily with the proper DSS.

### 6.3.3 Display and Dissemination of Information

To efficiently process the vast amount of information available in a DSS, the operator must present the data in a standard format to assist error-free assimilation of that information. Graphic depictions are recommended to process information that has spatial significance (e.g., maps with the real-time location of vessels, boom, and groups of people are very beneficial to decision makers and for press releases). Layers of various data sets can be turned on to display the desired information. A spill-trajectory model, oil fates model outputs, or endangered species habitat locations are examples of the types of information that a DSS can use and integrate. GPS transponders have been used to track the location of major equipment resources in real time. Video links and digital photos from surveillance aircraft and ships can also be managed and displayed within a DSS.

### 6.3.4 Reporting

Reports can be generated to track resources by various categories or filters applied to the databases. They can be generated to issue orders or assignments to various resources. Standard reports such as the site safety plan, communication plan, air operations summary, and assignment lists can be programmed into the DSS to make it easier to respond to standard spill requirements. Electronic versions of reports can be E-mailed as attachments to desired addressees.

## 6.4 MOBILIZATION

The proper planning, selection, and preparation of vessel and aircraft staging and loading facilities is critical for a successful ISB operation. Hours and days of valuable response time can be easily wasted due to poor planning and inattention to the mobilization aspects of the operation.

### 6.4.1 Base/Staging Area Facility Selection

It is vital to select staging areas that meet resource and logistics requirements in close proximity to the operating area. The staging areas must also provide for the safe and timely outfitting of ships and aircraft.

#### 6.4.1.1 Pier/Dock Facility

The following attributes are generally required for the dock facility selected:

- Adequate draft and pier length for the largest vessel at low tide
- Easy accessibility by the largest vessel to be used
- Quick access to the seaway adjacent to the operating area
- Sufficient crane and fork lift service to load the vessel with the heaviest equipment component
- Highway access to docking facility considering bridges and wide loads as applicable
- Staging area for equipment loading
- Proper shore ties
- Security for personnel, vessel and staged equipment
- Proximity to servicing interstate highways and airport
- Lighting for night loading

#### 6.4.1.2 Helibase

The following attributes are generally required for the airport facility selected:

- Proximity to the operating area
- Clear transit to water; minimum crossing of heavily populated areas (Heli-torch concern)

- Adequate work area for ISB ground crew and equipment
- Refueling capability for aircraft
- Airport security for aircraft, equipment and personnel

### 6.4.2 Vessel Load Out/Preparation

ISB drills with the vessels that are likely to be available and deployed for the actual operations should be conducted. This will ensure that all safety, training, and logistics issues are properly addressed before the response is required for an actual spill.

#### 6.4.2.1 Equipment Dockside Arrival Inspection

People familiar with operating the equipment should be assigned to inspect the equipment and vessel before it is loaded. This will ensure that it is all present and not damaged in transit. These personnel should also be familiar with the proper orientation and layout of the equipment on deck to optimize its use.

#### 6.4.2.2 Load Out of Vessel

A site safety supervisor should coordinate loading of the vessel. This is often the vessel's chief boatswain or a strike team supervisor. All heavy equipment, such as boom reels, power packs, and other potential missile hazards, must to be tied down on deck for possible storm conditions. The equipment should be oriented so that it can be deployed and retrieved without needing to move it at sea. Consideration should be given to propeller location for boom deployments and protection of equipment and operators in heavy sea conditions. Modifications to the delivered equipment, ship deck equipment and rails are sometimes required to make them function safely or properly. This is very time consuming to accomplish during an actual spill response. Attention to these details during planning and drills will pay high dividends during the real spill response.

#### 6.4.2.3 Final System Checkout before Getting Underway

Ensure that all required equipment is aboard and in good working order before leaving port. Critical operational equipment, such as power packs and boom reels, should be tested in place before getting underway. Check all tie-downs for all heavy equipment. Ensure that communications equipment is functioning properly.

### 6.4.3 Heli-torch Preparation

The material in this section is intended to provide a summary of the preparations required for the Heli-torch before its use in a burn operation. It is not intended to replace the in-depth training requirements for preparation and use of the Heli-torch or the detailed operating manuals supplied with the Heli-torch.

#### 6.4.3.1 Inspection of Equipment

Before any operations with the Heli-torch all components should be inspected. The inspection should check for loosening of bolts or wires, wear, missing components and the like, and it should cover:

- Lifting mechanism
- Heli-torch frame assembly
- Barrel mounting assembly
- Pump/motor assembly
- Electrical harness

Replace or secure any components as necessary before further operation.

#### 6.4.3.2 Set Up Equipment and Rig Helicopter

Attach the lifting mechanism and connect the electrical harness to the aircraft connecting points and/or hooks as shown in Figure 8.

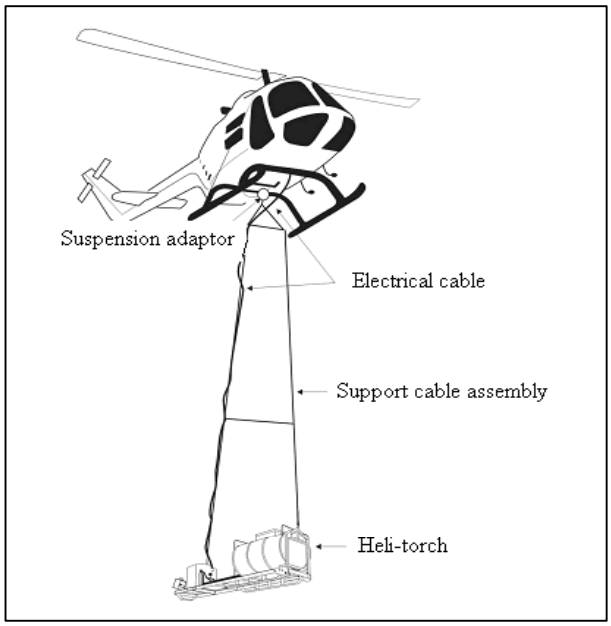


Figure 8. Mounting Configuration of Heli-torch to Helicopter (Fingas and Punt, 2001).

#### 6.4.3.3 System Checkout Before Helicopter Launch

Before operational use, follow the step-by-step procedures in the Heli-torch manual for a pre-flight checkout of all mechanical and electrical systems. This will involve a ground test of the Heli-torch system, ensuring proper operation by observing the following components:

- Spark at igniter tip

- Adequate pressure on propane tank
- Ignition of propane
- Air bled from gelled fuel line
- Pumping of gelled fuel to igniter
- Pump and ignition switches in the ON position before flight

Before takeoff, disengage the 50-amp circuit breaker in the helicopter to prevent the accidental release of gelled fuel during take-off and transit to the burn site.

## 6.5 OIL COLLECTION

The oil must generally be contained with boom in order to consolidate it, transport it to the burn area, and increase its thickness to facilitate efficient burning.

### 6.5.1 Boom Basics

Offshore boom is generally used to collect oil, consolidate it, and move it to the desired burn location. It is sometimes used as lead deflection wings attached to the more expensive specialized fire-resistant boom that is used as the boom apex for the burn operation. As discussed earlier, the physics involved places limitations on the speed that the oil can be contained and moved. Wind and waves further degrade this containment capability by emulsifying the oil and sometimes causing boom system failures of splash over or drainage under the barrier.

Excessive wind can knock down a fence-type boom, and generate currents and waves that degrade the effectiveness of a boom. Whenever possible, tow the conventional "non-burning" containment boom with the wind and prevailing current to reduce the relative velocity of the boom to the oil and to minimize wave-turbulence, thus reducing oil entrainment and splash over. **Fire-resistant boom, however, must be towed into the wind or possibly crosswind to prevent smoke and fire from propagating toward the towboats**.

### 6.5.2 Oil Thickness Control

The volume of oil, the boom geometry and the speed of advance control oil thickness. A more confined boom apex, such as a V-shape, with a maximum speed of advance (without oil loss), will create the thickest oil for a given volume. This thickness may be several inches or more at the apex. Maintaining a high speed of advance, however, increases the risk of oil entrainment because precise control of a vessel's speed is difficult. A thicker layer of oil burns more efficiently because of the insulating effects of the oil near the surface of the water. A minimum thickness of 2 to 3 mm is usually required to sustain an ignition and burn.

## 6.6 IGNITION PROCEDURES

This section describes the operations involved in igniting an offshore slick from either a helicopter or a surface vessel.

### 6.6.1 Aerial Ignition

Once the Heli-torch arrives on-site, the helicopter should fly it to a well-removed practice area to turn on the electrical components of the Heli-torch and operate the device to ensure that it is working properly (see Section 6.4.3).

The ignition of a contained oil slick should take place at least 0.25 to 0.5 mile crosswind of the spill source, any other slicks, and other spill operations. This may involve towing the contained slick to a location that is adequately positioned and distanced from the potential safety problems. Igniting the slick upwind of other spill operations would threaten them with smoke, and igniting the slick downwind of the source or other slicks would also present a safety concern. This, however, may not be a problem for some continuous source burns.

**The flight path of the powered Heli-torch should be planned to minimize flying over vessels and slicks that are not to be ignited. Before the Heli-torch is used, final verbal approval must be obtained from the Unified Command.**

The Heli-torch is generally operated from an altitude of 30 to 50 feet at airspeeds from 0 to 50 miles per hour (mph) (slower speeds are recommended for greater accuracy and ignition power). For igniting oil contained in a fire-resistant boom, the vessels towing the boom should be proceed directly upwind. The favored approach for aerial ignition on the first pass is to fly the Heli-torch at right angles to the direction of tow of the boom approximately 50 feet upwind of the leading edge of the contained oil. The Heli-torch produces globules of burning fuel the size of golf balls to baseballs that burn for 4 to 10 minutes. These land on the water and drift back to the leading edge of the oil.

If the oil is relatively volatile and the winds are calm or light, the risk of explosive concentrations of vapor increases. For these situations, an additional precaution would be for the Heli-torch to be operated at an altitude of at least 100 feet, at a distance 100 to 200 feet upwind of the leading edge of the boom. If this does not ignite the oil, the Heli-torch would be directed to move in closer to the contained area and repeat the ignition attempts. In any case, monitoring with combustible gas detectors should be conducted on all vessels to confirm that it is safe for the Heli-torch to proceed with ignition.

If the fire does not spread quickly when the burning globules contact the oil, several additional passes should be undertaken with the Heli-torch deploying gelled fuel directly onto the slick starting at the upwind edge. The ignition of subsequent slicks can proceed without delay by operating the Heli-torch directly over the oil.

For oil that is very difficult to ignite, it may be necessary for the helicopter to hover over one or more locations directly above the oil and release a steady stream of gelled fuel. Handheld igniters incorporating solid fuels are generally more powerful than Heli-torch fuel but provide a

smaller area of flame. The use of ignition promoters (e.g., No.1 or No.2 diesel fuel or jet fuel spread over the surface of the slick to be ignited - see Section 4.2.4.1) can also help in initiating a slick burn. Care must be taken to spread the promoter over a large area; pumping it onto one location on the target slick will merely create a thick pool of promoter in one spot. Emulsion-breaking chemicals can be sprayed onto the slick or mixed into the Heli-torch fuel to promote emulsion breaking and subsequent ignition.

If an uncontained burn is being attempted, the first pass of the Heli-torch should be across the upwind edge of the slick (the burning globules will not drift into an uncontained slick). If flame spreading is slow, subsequent passes should be made around the entire perimeter of the slick. This will promote herding of the slick (by the air that is induced to support combustion) and will result in greater oil removal efficiencies.

If the ignition helicopter is not being used as one of the spotter aircraft, and subsequent ignitions are not likely to be required immediately, the helicopter should be landed to conserve fuel.

### 6.6.2 Vessel-based Ignition

Handheld devices could be used instead of the Heli-torch, particularly for smaller contained spills and for oils that are relatively fresh and not emulsified. As with the Heli-torch, caution is needed against the possibility of combustible vapor concentrations in the vicinity of the slick. The igniter should be thrown from one of the boom-towing vessels or from a support vessel at a safe distance upwind of the contained oil. The igniter would then drift back into the slick and ignite the oil. Several igniters should be on hand to allow multiple attempts if required.

## 6.7 BURN PROCEDURES

This section describes the general procedures for ISB in two modes: burning continuously with fire-resistant boom and burning collected oil in discrete batches with fire-resistant boom. The procedures for extinguishing a burn are also discussed. Specific examples of these procedures applied to a variety of hypothetical spill incidents are given in the next section.

Unlike conventional booming operations, ISB requires that a towed fire-resistant boom system travel upwind, or at an angle to the wind not greatly exceeding 90 degrees. This is to ensure that the operators on the tow vessels are not exposed to the smoke plume. Tow speeds must be maintained at 0.5 to 0.75 knots over the water. One tow vessel should be designated as the lead, with the responsibility of coordinating course and speed changes. **The tow vessels should not be positioned in such a way that they come in contact with thick oil slicks.**

Select towlines using a safety factor of 7-times the expected drag force for the boom being used while towing at 1 knot. Use long tow lines (200 to 500 feet long on each end) to minimize prop wash on the slick, to maximize separation distance from the flames, and to allow additional reaction time in case of a tow vessel engine failure or emergency. Towlines should be non-metallic so that an axe can be used to quickly sever the line in case of an emergency. Use synthetic line that floats, so that it can be easily retrieved if dropped. A third vessel should accompany each towed system to periodically survey the condition of the fire-resistant boom, to act as a backup in case of a tow vessel failure and to recover residue, if required. When

operating in a widely scattered slick, aircraft should be used to direct the vessels to concentrations of oil.

### 6.7.1 Continuous Burning

The continuous ISB mode involves simultaneously collecting and burning oil with one fire-resistant boom system. It is probably the most efficient way to conduct controlled burning. The boom would usually be maintained by two tow vessels in a U-configuration either stationary, down-drift of a leak, or moving slowly through a thin, scattered slick, as seen in Figure 9.

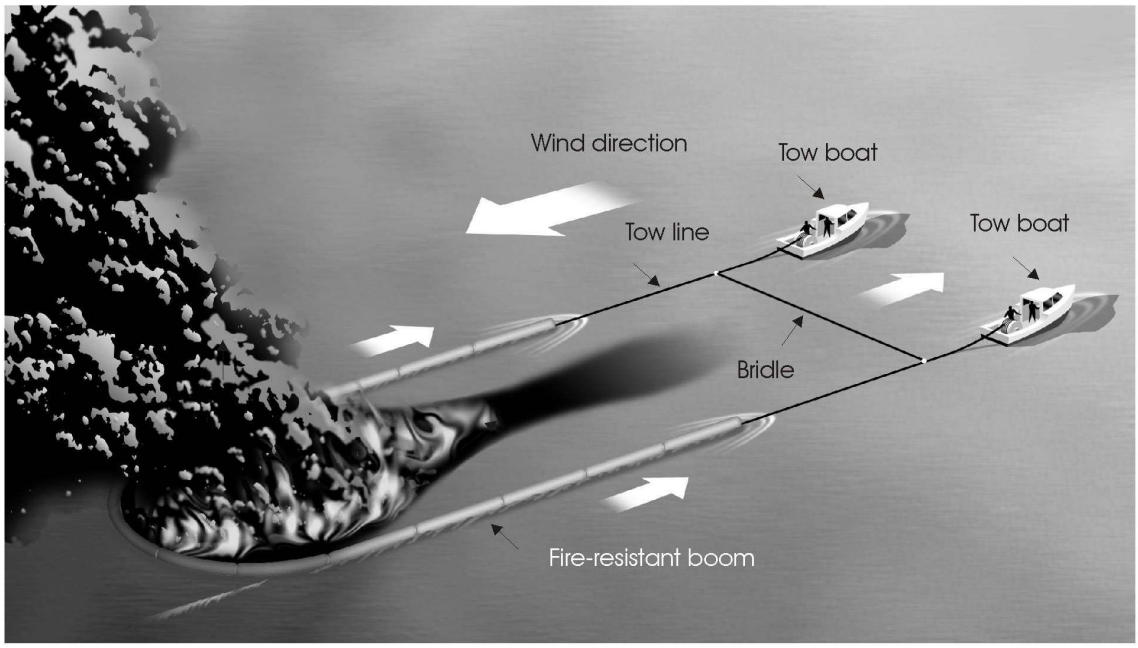


Figure 9. Continuous burning using tow boats (Fingas and Punt, 2001).

### 6.7.2 Batch Burning

ISB in discrete batches is used when either the size of the spill excludes continuous burning, or the ISB operations could negatively impact other operations on site.

#### 6.7.2.1 Independent Task Force Procedure

This tactic uses one or more independent fire-resistant boom units as shown in Figure 10.

Batch burning involves eight basic steps:

- Collecting oil in the boom
- Moving the filled boom to a safe location
- Igniting the oil
- Maintaining the burn
- Extinguishing the burn
- Recovering the residue
- Assessing of the fire-resistant boom
- Returning to the slick

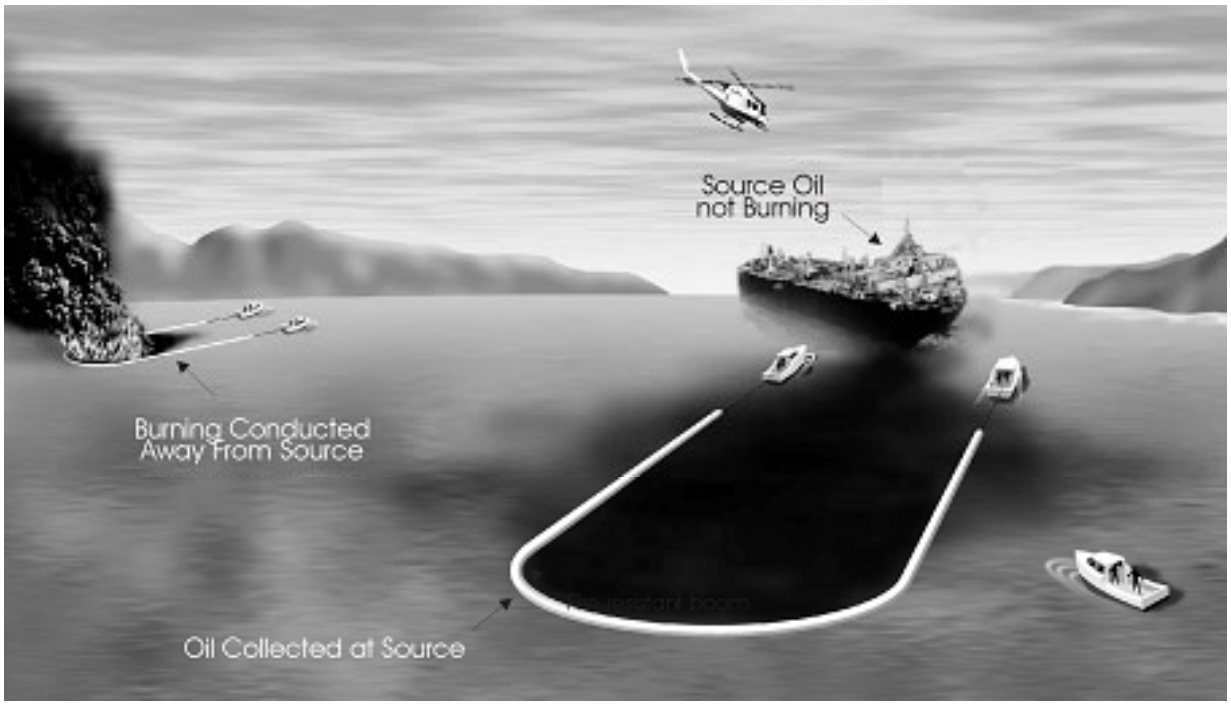


Figure 10. Independent task force operational procedure (Fingas and Punt, 2001).

Compared to continuous burning, the time spent collecting oil in the boom, relocating the filled boom for burning and returning the boom to the slick after extinction to continue collection, results in the reduction of overall burn efficiency.

#### 6.7.2.2 Coordinated Task Force

This tactic uses one or two sets of conventional boom, each with another set of tow vessels, to collect oil from a slick and transport it to a fire-resistant boom system at a separate location for burning, as shown in Figure 11. The feeder process improves the usage of the fire-resistant boom for burning. The logistics and complexity of the operation, however, increase

considerably. At most, two conventional boom systems can be used to support one fire-resistant boom system. Maintaining low enough tow speeds to ensure no loss of oil containment has been difficult when practicing Coordinated Task Force tactics. The benefit of V-shape boom allows for faster towing speeds without oil entrainment thus increasing the collection rate.

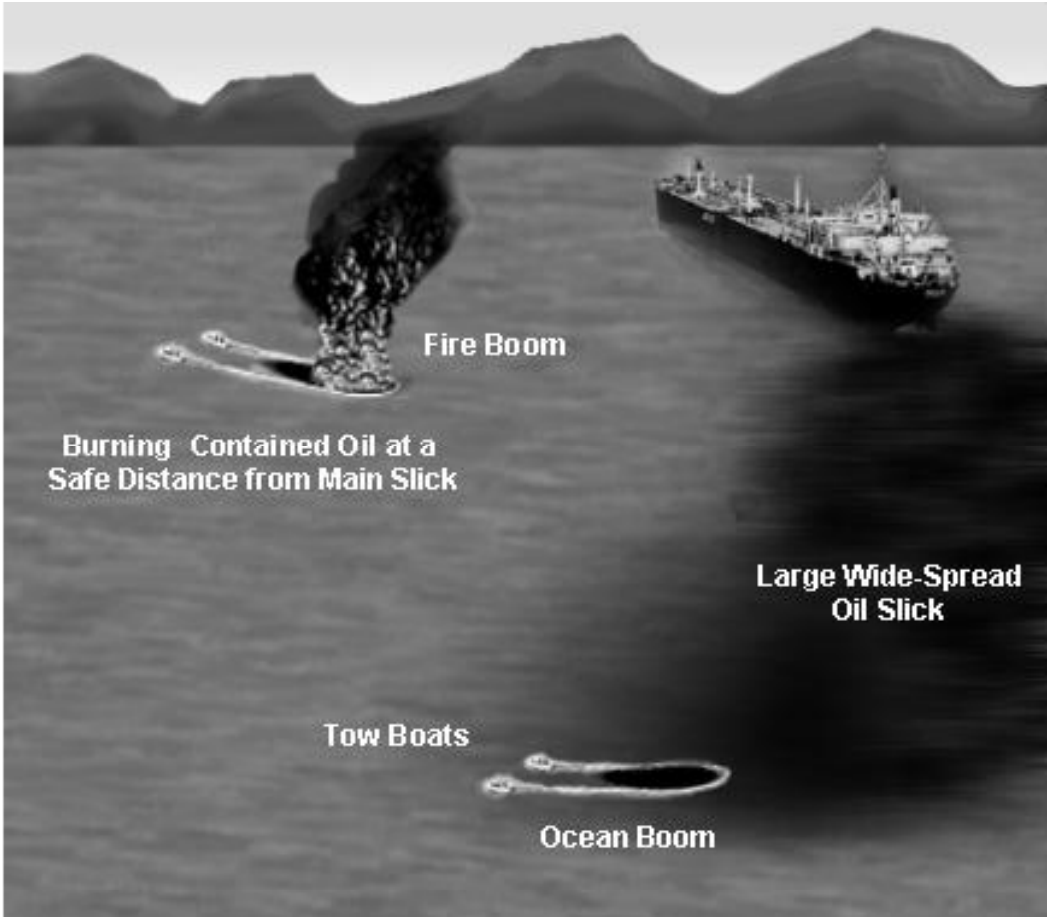


Figure 11. Coordinated task force operational procedure (A. Allen, 1999).

The next sections discuss the three prescribed methods for release of the collected oil into the fire resistant boom: the J-release, the Towline Release and the Speedup Release. The first two tactics for unloading the oil from the conventional boom into the fire-resistant boom have been tried (albeit, only with oranges, not oil).

#### *6.7.2.2.1 J-Release*

Figure 12 illustrates the J-release technique, where one tow vessel drops straight back without letting go of its towline until the oil in the apex is released out of the boom.

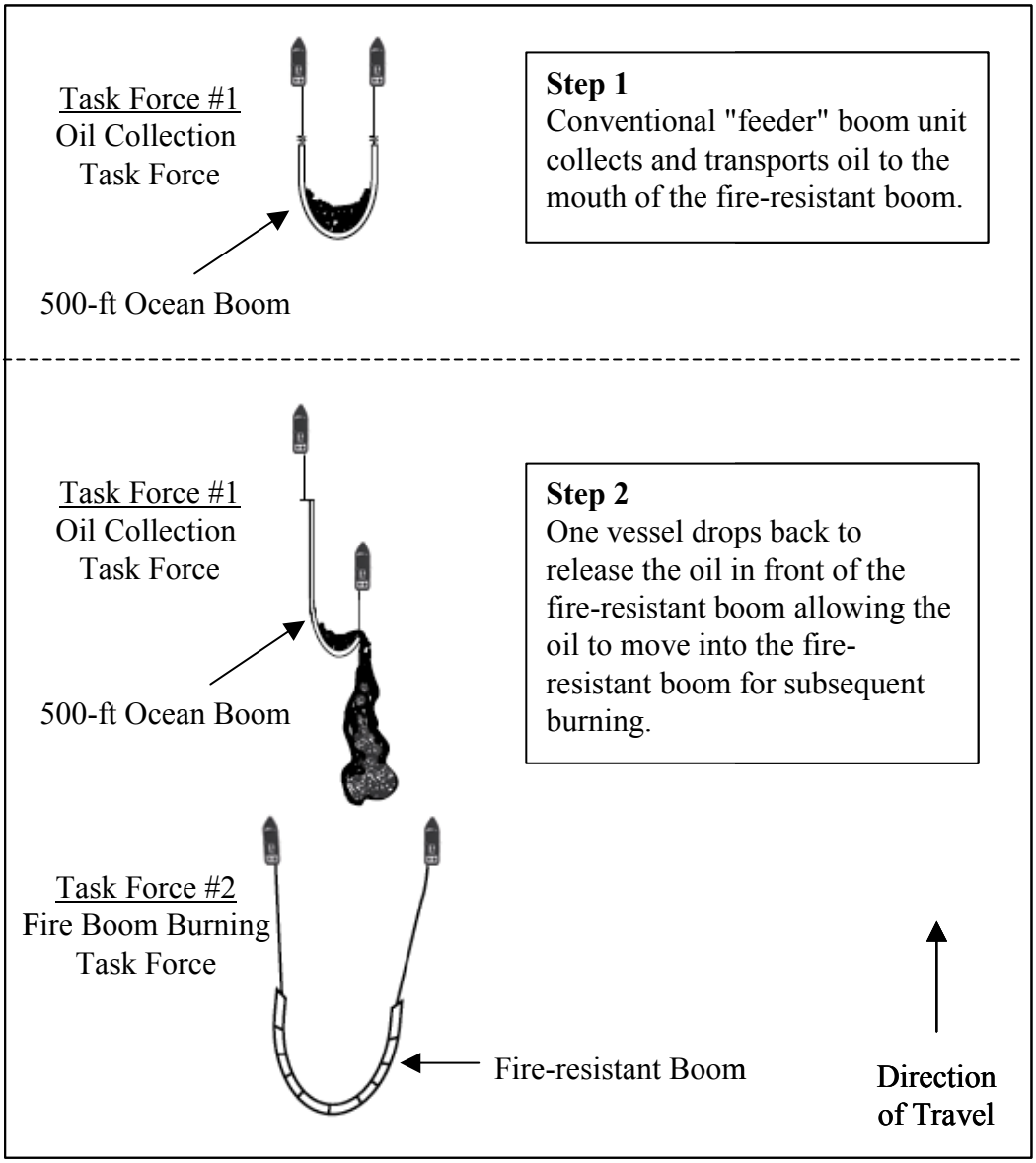


Figure 12. J-release technique into fire-resistant boom.

#### *6.7.2.2.2 Towline Release*

Figure 13 illustrates the Towline Release method of transferring oil from a conventional collection boom to a fire-resistant boom for burning. It is initiated when one tow vessel drops its connection to the conventional boom and reconnects back at the slick when collection operations are to recommence. The Towline Release method seems to offer better accuracy in dropping the collected oil into the mouth of the U of the fire-resistant boom and faster transit speeds back to the oil collection area; however, retrieving the oily towline may prove difficult or unsafe if marginal sea conditions develop. Appendix B presents typical deployment times of these two methods using simulated oil during ISB drills off Galveston, Texas.

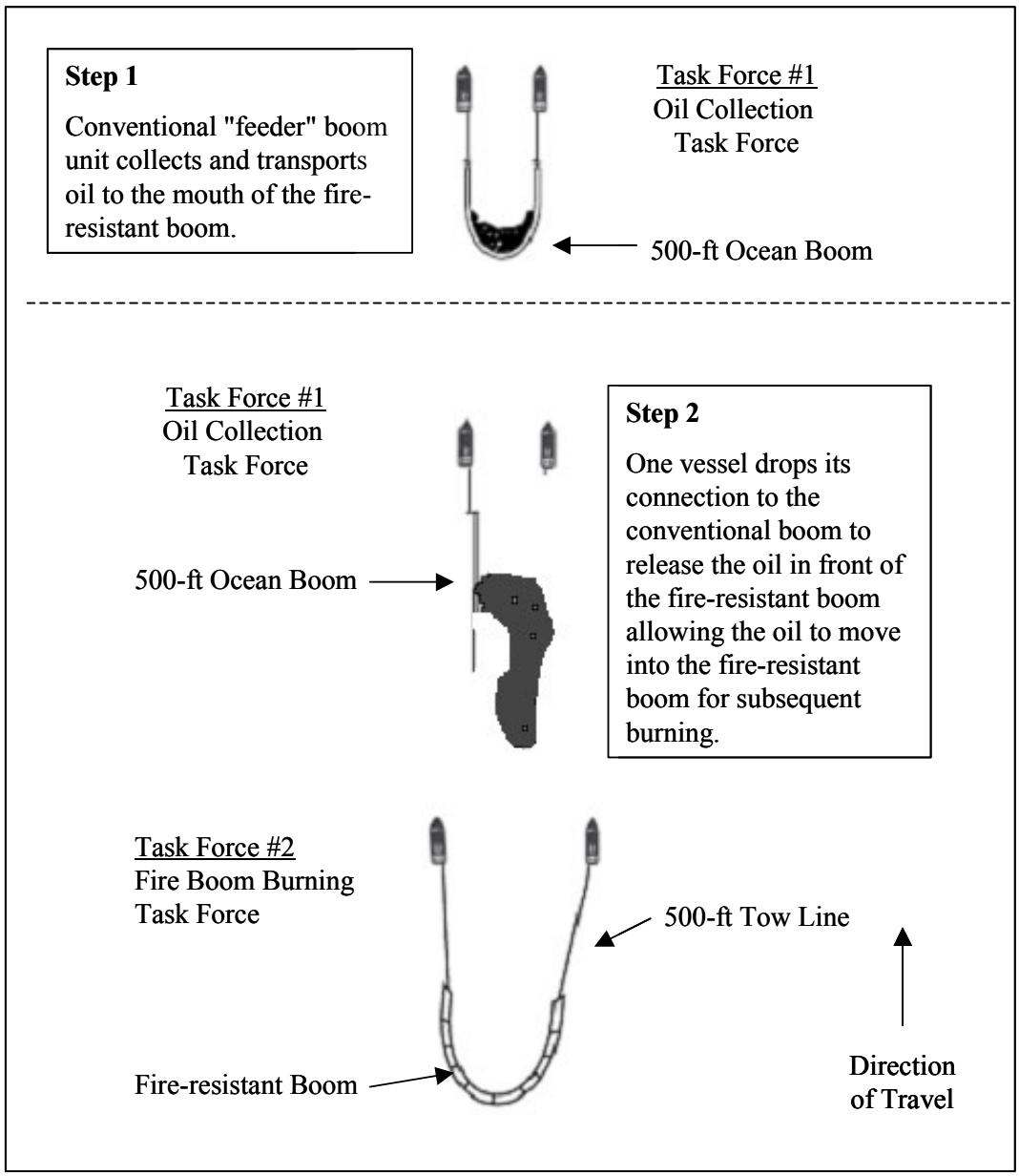


Figure 13. Towline release technique.

#### *6.7.2.2.3 Speedup Release and Ad-hoc methods*

If V-shaped boom is used with a closed apex as a feeder resource to the ISB, the two aforementioned release methods may not work. This depends upon the boom shape-keeping method used. For example, a net or cross bridle configuration will probably not allow the oil to be released by the J-release and towline release methods. In this situation, the speedup release method may be appropriate but it has not been tried during ISB exercises. The tow vessels speed up to a velocity where the oil entrains under the boom or sloshes over the top. Care should be taken not to damage the boom or towline with excessive speed. This release method can also be used with U-shaped boom. Other ad hoc release methods can be tried with V-shaped boom, which may include using a floating dump line attached to the bottom of the boom apex chain or main tension line. This method will allow a second support vessel to lift up the skirt in the apex section to facilitate oil release upwind or up-current of the fire-resistant boom.

### 6.7.3 Fire Extinction

Once most of the oil contained in a fire-resistant boom under tow has been consumed, the fire size will diminish, signaling the beginning of the extinction phase. Maintaining or increasing speed to 0.75 knot tow speed will thicken the remaining oil so that it burns more efficiently to the end. Eventually, the fire will reduce to small areas of thicker oil directly in contact with the boom. Care must be exercised at this stage, because the fire can easily flare up again, particularly if a semi-emulsified oil is being burned. In quiescent conditions (i.e., no relative current between the slick and the water) the extinction phase may involve a "vigorous burn" period, in which the water beneath the slick boils violently, causing the height (and radiant heat) of the fire to increase dramatically, and then suddenly extinguish. This has only been seen in tank tests and is unlikely to occur unless the towing vessel loses headway. Once all flame has extinguished, the state of the residue and boom should be assessed by personnel on a third vessel and the residue recovery operations should commence, if necessary.

Two techniques are available to intentionally extinguish the fire. The first, as yet untried, involves speeding up the tow vessels and entraining the burning oil beneath the boom. It is possible that the flames from the slick inside the boom could reignite the oil resurfacing behind the boom. The second technique involves one tow vessel releasing the boom and allowing the burning oil to escape. This will, at first, allow the fire to expand greatly in size (as it increases with the spreading oil slick), until it reaches a size at which its thickness is about 0.5 inch. At this thickness, the air being drawn into the fire balances the spreading forces of the oil and the slick stops spreading. The fire will remain at this size for a few minutes while it consumes the oil down to 1 mm, then rapidly extinguishes. The increased width of the fire involved in the second technique will proportionately increase radiant heat and increase smoke production so all vessels must stay clear.

### 6.7.4 Uncontained Fire

A thick, fresh slick that is sufficiently separated from other slicks and the source can be ignited and burned without containment (Figure 14). Ignition should occur around the entire perimeter of the slick to enhance the fire-induced wind herding effect.

Figure 14. Burning an uncontained oil slick (Fingas and Punt, 2001).

### 6.7.5 Vessel Fire

In rare cases, like a hard grounding or major collision, the vessel may not be salvageable. In general, the remaining fuel and oil are offloaded to another vessel, barge, or bladder when weather and time permit. In some cases, however, the oil may not be able to be offloaded before the ship is likely to sink or be scuttled intentionally. This was the case of the bulk carrier *NEW CARISSA* grounding off the coast of Oregon several years ago. A decision to burn was made after the vessel cracked, released its diesel and was declared a total constructive loss by the insurance company. Lessons learned on this type of unique burn operation are provided in Appendix I.

## 6.8 OTHER OIL CONSOLIDATION TACTICS

Many tactics are available to consolidate and collect oil that support ISB and other recovery operations. Several tactics that have proven to be effective in other spill responses or tests in controlled conditions (not in the open ocean) are described in the following paragraphs.

### 6.8.1 V-Shaped Booming

V-shaped or deflection boom should be used to prevent oil entrainment in fast currents or during high speeds of advance. As seen in Figure 15, the boom angle to the current must be very shallow, 20 degrees or less, to deflect oil without entrainment at currents above 2 knots. The challenge is to keep the boom in shape at the desired deflection angle when the water pressure tends to bulge it out. Boom can be kept in a V shape by various methods, the most common being cross bridles; other methods involve a net across the bottom of the boom.

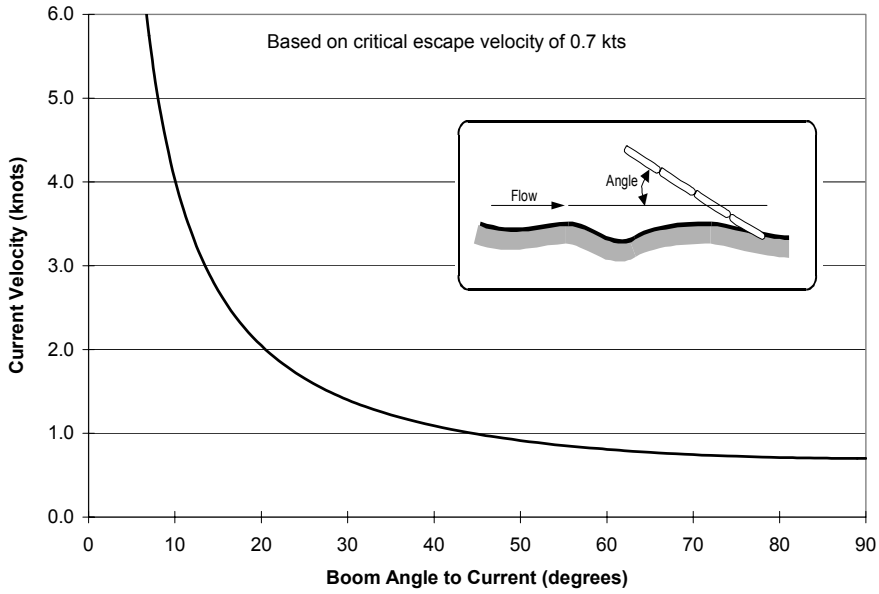


Figure 15. Deflection boom angle.

### 6.8.2 Diversion

Diversion is another method to move and concentrate oil for removal by ISB and other methods in open water. Diversion can be accomplished in many different ways. Physical barriers can divert oil or the surface water current can be induced or redirected to move the oil. The most common method is to use deflection boom that provides a barrier at an angle to the current. Deflection booming in currents above 1 knot requires offshore anchors to keep it in position at the proper angle to the current. The boom tends to form a J shape due to high drag forces that often cause oil entrainment in the belly of the boom where the minimum angle is exceeded. This often requires more anchors along the boom length to prevent entrainment. Boom deflectors can be used in lieu of anchors in currents or in speeds of advance above 1 knot. Other diversion methods include the use of Flow Diverters that can be towed up to 5 knots to divert and consolidate oil. Prop wash can also be used to divert oil into containment areas. For further information on these technologies and tactics see Coe and Hansen, 2001, and Coe and Gurr, 1998.

## 6.9 POST-BURN ANALYSIS

### 6.9.1 Estimation of Burn Effectiveness

Several techniques, including encounter rate calculations and boom volume calculations, have been proposed as methods of determining the amount of oil removed by ISB. These techniques all require an estimate of the oil slick thickness, which is difficult to obtain visually and notoriously difficult to measure. For the purposes of ISB, it is much more accurate to use burn times, rates, and areas to produce effectiveness estimates. This calculation method is presented in Appendix D.

### 6.9.2 Assessment of Equipment Condition

When fire-resistant boom is used to contain burning oil, some amount of thermal stress and material degradation will generally be present, depending on the size and duration of the burn, and on the sea state. Between burns in a multiple-burn scenario, or following a burn and before storing the boom, it is important to inspect the boom and any ancillary equipment in order to assess maintenance or repair requirements.

If the boom is to be retrieved, a thorough visual inspection should be conducted; it can be accomplished as the boom is taken out of the water. If the boom is to be left in the water for a subsequent burn, a thorough inspection would be more difficult as it would require moving along the boom, section by section, at close range in a small boat. In this situation, a thorough inspection would be considered if there had been operational problems or observations of diminished equipment performance during the burn (e.g., failure or interruption of ancillary equipment, tow speeds in excess of 1.5 knots, oil burning outside the contained area, or poor wave-following performance by the boom).

The inspection would focus on portions of the boom at and above the water line, which are the areas subjected to the greatest thermal stress. Areas of particular concern include:

- Refractory fabrics that may self-abrade
- Hinges, connectors, and other components that experience cyclic loading
- Sheet-metal flotation chambers for excessive deformation
- Damage to or loss of component fasteners (i.e., rivets, bolts, and welds)
- Loss of or excessive damage to flotation elements

Some fire-resistant booms employ an outer cover of PVC or similar material that is designed to protect underlying layers of more fragile refractory material during handling and storage. This outer layer is designed to be destroyed during the early phases of a burn. While this is to be expected and does not necessarily preclude continued use, additional care should be taken in the subsequent handling and towing of the boom. This will minimize unnecessary damage to the now-exposed refractory material, which is less resistant to mechanical stresses and abrasion.

For actively cooled booms, the inspection should include all ancillary equipment including pump(s), water inlet filters, drive units, distribution headers, and hoses. During the visual inspection of the boom, particular attention should be paid to areas of greater than average degradation because this could indicate localized failure of the water distribution system.

### 6.9.3 Follow-up Monitoring

After burn operations are complete (perhaps even after each burn or on a daily basis), the following should be recorded and collected, as applicable:

- Time, location, and duration of each burn
- Estimated area of burn

- Number and type of igniters used (i.e., handhelds, deployed, and volume of Heli-torch fuel used)
- Environmental conditions for each burn (wind and current speed, directions, and air and water temperatures)
- Collection and labeling of all video and still footage of the burn
- Heading and altitude of the smoke plume(s) (use one of the spotter aircraft to search downwind for any visible smoke and record its location)
- Archiving of all SMART monitoring data
- Volumes of residue recovered (obtain and document a sample of the residue)
- Lengths of fire-resistant boom requiring replacement
- Any complaints obtained (record and investigate them)
- Lessons learned

## 6.10 BURN RESIDUE

The residue will become more viscous as it cools, and it may solidify. For personnel safety and equipment protection, the burn residue should cool for at least one hour (although under some conditions cooling can occur in less than 20 minutes) after it is extinguished before recovery is attempted. Many skimmers and positive displacement pumps have plastic parts that will melt at temperatures above 160 $^{o}$F.

### 6.10.1 Need for Recovery

The burning process removes the lighter aromatics that are usually more toxic components of the oil. The viscous oil residue has the potential, however, to coat and smother biota and kill or injure birds and mammals that come in contact with it. Therefore, the oil should be recovered if possible. If the residue is not a significant volume, it could be kept in the boom for additional burning attempts before removal.

### 6.10.2 Recovery Techniques

Recovery of burn residue is basically the same as that for any viscous oil recovery operation. The fire-resistant boom generally already contains it. For open water burns, a containment boom or advancing skimmer is needed to collect the burn residue. This can be accomplished with conventional boom and sweeps once the residue cools down. A skimmer should be lowered into the apex of the boom using a crane from a support vessel, or a self-propelled skimmer can maneuver into the open boom area. Care should be taken not to bring a vessel or skimmer into contact with the fire-resistant boom because the boom may be more fragile and more easily damaged after the burn especially if problems occurred during the burn. The wind or current can be used to push the residue into the apex toward the skimmer. Towing the containment boom assists in this procedure by moving the skimmer and remaining oil into the back of the apex.

The residue may eventually submerge because it loses many of the lighter products during the burn. As the burn residue cools, its density increases slightly, which may also cause it to sink. Sinking oil may go to the bottom or it may suspend in the water column where changes in the water density occur to provide enough buoyancy. Recovery of submerged oil is very difficult, but it can be accomplished with specialized equipment if it can be detected. Products and techniques have been developed to recover Orimulsion and other oils that tend to submerge just below the surface, and these may be helpful for burn-residue recovery in some situations. This recovery technique is described at a Web site listed under the Reference Internet section under "Other Links." Aircraft surveillance can be used to search for oil burn residue that may submerge just below the surface. Sonar and depth sounding sensors may also be useful in detecting, mapping and, in some cases, for estimating the volume of submerged oil.

### 6.10.3 Storage and Disposal

It is very important to select a storage device or method that is capable of offloading the viscous residue product. The recovery storage device should be capable of offloading the recovered oil once it is returned to port. Suction lines/pumps will usually not be capable of removing this type of product due to the limited pressure head they develop. Storage devices with at least one of the following options should be used to facilitate offloading of viscous oil:

- Dumpsters, drums, or tanks with open tops or large hatches to facilitate a submersible pump or a crane bucket
- Bagged residue for removal by hand or crane
- Bladders with an integral pump flange no less than 4 inches in diameter (preferably 6 inches or greater) to attach an offloading pump. This may require remotely operated valves with added buoyancy to compensate for pump and valve weight such as the USCG Dracone Offloading Pumping System (DOPS) developed by DESMI and distributed by Hyde Marine
- Barges or internal skimmer tanks with integral submersible pumps

Local authorities should be consulted on an appropriate method of oil disposal. The number of times the recovered product is transported should be minimized to reduce transportation and decontamination costs.

## 6.11 EQUIPMENT CLEANUP

All equipment and vessels must be cleaned to prevent oil release when they leave the operating area. Depending upon the nature of the cleaning and the weather conditions, establish decontamination zone(s) to efficiently clean oiled equipment and ships. If items such as conventional boom are badly oiled, disposal may be more cost effective than cleaning for reuse. Proper disposal procedures should be used for discarded equipment, cleaning materials, and oily water as required by the local and federal authorities.

### 6.11.1 Establish Decontamination Zones

Decontamination zones help prevent oil and oily waste from escaping during the cleaning process and minimize cross contamination to other areas. Procedures and decontamination zones should be established as close to the origination point as possible. Each response vessel that handles oiled equipment should establish a zone aboard the ship to prevent tracking oil into the living quarters. In some cases, equipment can be cleaned initially as it comes out of the water or on deck to partly remove gross contamination. A more thorough cleaning can be accomplished at a centralized decontamination zone, which is usually set up ashore. The response ship's hull will be oiled and require decontamination. A zone, which is boomed off, should be established where heavy equipment and boats can be surrounded while they are cleaned. Oil recovery device(s) to extract the floating oil that will be released within the containment area should be used. This may include sorbent material for sheen removal and skimmers for more concentrated oil removal. This should be conducted in sheltered waters away from environmentally sensitive areas.

### 6.11.2 ISB Unique Inspection and Cleanup Considerations

The operational plan should consider the need to periodically inspect, repair, or replace all or part of the fire-resistant boom if the effects of the fire degrade it. This will depend on the type of boom to be used, the size of the spill, and the intensity and duration of the burn.

Some fire-resistant booms become brittle and more easily damaged after a burn. Care should be taken to handle them gently while cleaning. They should be inspected for damage that may preclude them from being used or may require repair before reuse. The booms should be stored to protect against mildew, pests, and damage from other equipment.

# REFERENCES AND RESOURCES

## TRADITIONAL

Allen, A. (1991). Controlled burning of crude oil on water following the grounding of the Exxon Valdez. Proceedings of the 1991 Oil Spill Conference. American Petroleum Institute, Washington, D.C., pp. 213-216.

Allen, A. (1999). Controlled burning of oil spills. Course book for training conducted with the U.S. Coast Guard R&D Center in Galveston, Texas, 21 June 1999.

API. (2002). Identification of oils that produce non-buoyant in-situ burning residues and methods for their recovery. American Petroleum Institute publication number DR145, produced under contract by S.L. Ross Environmental Research Limited. API. Washington, D.C.

Buist, I.A., Ross, S.L., Trudel, B.K., Taylor, E., Campbell, T.G., Westphal, P.A., Meyers, M.R., Ronzio, G.S., Allen, A.A., and Nordvik, A.B. (1994). The science, technology, and effects of controlled burning of oil spills at sea. MSRC Technical Report Series 94-013. Washington, D.C.: Marine Spill Response Corporation.

Buist, I., Potter, S., McCourt, J., Lane, P., Newsom, P., Hillebrand, L., and Buffington S. (1999). Re-engineering of a Stainless Steel Fire Boom for use in Conjunction with Conventional Fire Booms. Twenty-second Arctic and Marine Oilspill Program Technical Seminar Proceedings. Environment Canada. Ottawa. p. 545-566.

Buist, I., McCourt, J., Morrison, J., Schmidt, B., Devitis, D., Nolan, K., Urban, B., Moffatt, C., Lane, J., Mullin, J.V., and Stahovec, J. (2001). Fire Boom testing at OHMSETT in 2000. Twenty-fourth Arctic and Marine Oilspill Program Technical Seminar Proceedings. Environment Canada. Ottawa. p. 707-728.

Camlin, T. and Mangranaro, J. (2001). In-Situ Burn Investigation: Exercise #3, Galveston, Texas. Unpublished. Groton, CT: USCG Research and Development Center.

Camlin, T. (2000). In-Situ Burn Investigation: Exercise #2, Galveston, Texas. Unpublished. Groton CT: USCG Research and Development Center.

Camlin, T. (2000). In-Situ Burn Investigation: Exercise #1, Galveston, Texas. (CG-D-18-00). Groton CT: USCG Research and Development Center. (NTIS No. ADA384650).

Coe, T.J. and Hansen K. (2001). Oil Spill Response in Fast Currents - A Field Guide, (CG-D-01-02). Groton CT: USCG Research and Development Center. (NTIS No. ADA400660).

Coe, T.J. and Gurr, B. (1998). Fast Water Oil Spill Response; A Technology Assessment. (CG-D-18-99). Groton CT: USCG Research and Development Center. (NTIS No. ADA369279).

Fingas, M. and Punt, M. (2000). In-situ Burning - A Cleanup Technique for Oil Spills on Water. Environment Canada. Ottawa, Ontario, Canada: Emergencies Science Division, Environmental Technology Centre.

McCourt, J., Buist, I., Pratte, B., Jamieson, W., and Mullin, J. (1998). Continued development of a test for fire booms in waves and flames. Twenty-first Arctic and Marine Oilspill Program Technical Seminar Proceedings. Ottawa, Canada. p. 505-528.

Stahovec, J.G., Urban, R.W., and Wheelock, K.V. (1999). Water-cooled, fire boom blanket, test and evaluation for system prototype development. Twenty-second Arctic and Marine Oilspill Program Technical Seminar Proceedings. Environment Canada. Ottawa. p. 599-612.

Walton, W.D., Twilley, W.H., Mullin, J., and Hiltabrand, R.R. (1998). Evaluating a protocol for testing fire-resistant oil spill containment boom. Twenty-first Arctic and Marine Oilspill Program Technical Seminar Proceedings. Environment Canada. Ottawa. p. 651-672.

Walton, W.D., Twilley, W.H., Bryner, N.P., DeLauter, L., Hiltabrand, R.R., and Mullin, J. (1999). Second phase evaluation of a protocol for testing fire-resistant oil spill containment boom. Twenty-second Arctic and Marine Oilspill Program Technical Seminar Proceedings. Environment Canada. Ottawa. p. 447-466.

## INTERNET LINKS (*HYPERLINKS*)

## U. S. FEDERAL AGENCY LINKS

1. Minerals Management Service ISB Research
http://www.mms.gov/tarprojectcategories/insitu.htm

2. NOAA ISB Page
http://response.restoration.noaa.gov/oilaids/ISB/ISB.html

Spill Tools - In-Situ Burn Calculator™
http://response.restoration.noaa.gov/oilaids/spiltool/spiltool.html

3. NAVSEA OOC – Pollution Equipment
http://www.supsalv.org

NAVSEA SUPSALV Fire-Boom System
http://www.essmnavy.net/fireboom.htm

4. U. S. National Response Team (Search for key word ISB)
http://www.nrt.org/

5. EPA *EXXON VALDEZ* Summary
http://www.epa.gov/oilspill/exxon.htm

## U. S. COAST GUARD LINKS

1. Office of Response
http://www.uscg.mil/hq/g-m/mor/

2. Risk home page (Commandant G-M)
http://www.uscg.mil/hq/gm/risk/

Operational Risk Management (COMDTINST 3500.3)
http://www.uscg.mil/hq/gm/risk/e%2Dguidelines/html/vol4/volume4/gen%5Frec/orm/comdtinst3500.3.htm

3. National Response Center
http://www.nrc.uscg.mil/

4. National Strike Force
http://www.uscg.mil/hq/nsfweb/index.html

5. National Pollution Funds Center
http://www.uscg.mil/hq/npfc/npfc.htm

6. First District (New England) Alternative Response Technologies
http://www.uscg.mil/d1/staff/m/art.html

7. Research and Development Center
http://www.rdc.uscg.gov/

In-Situ Burn Exercise #1 Galveston, Texas
http://www.rdc.uscg.gov/rdcpages/On-Line-Reports-Page-2000.htm

Oil Spill Response in Fast Currents - A Field Guide
http://www.rdc.uscg.gov/rdcpages/On-line-Reports-Page-2002.htm

## FIRE-RESISTANT BOOM MANUFACTURER/SUPPLIER LINKS

1. Applied Fabric Technologies
http://www.appliedfabric.com/

2. Elastec - American Marine
http://www.elastec.com/index.html

3. Global Spill Control - FireGard
http://www.globalspill.com.au/fire/

4. Kepner Plastics Fabricators
http://www.kepnerplastics.com/

5. Oil Stop
http://www.oilstop.com/

6. Quali Tech Environmental
http://www.qualitechco.com/environmental.htm

## IGNITION EQUIPMENT LINKS

1. Fire Spec Systems
http://www.Heli-torch.com/index.html

2. Isolair Helicopter Systems
http://www.isolairinc.com/

3. Simplex Manufacturing
http://www.simplexmfg.com/

## MISCELLANEOUS ISB LINKS

1. American Petroleum Institute
http://api-ep.api.org/

2. Cutter Environment – Oil Spill Reports
http://www.cutter.com/oilspill/reports/index.html

3. ITOPF Alternative Response Techniques
http://www.itopf.com/alternat.html

4. SL Ross ISB Research
http://www.slross.com/tech/techevalmain.htm

5. Texas General Land Office Spill Response
http://www.glo.state.tx.us/oilspill/

## OTHER LINKS

1. Unmanned Aerial Vehicles (UAV) Forum
http://www.uavforum.com/

2. Orimulsion (partly submerged oil) recovery research
http://www.oil-spill-web.com/science/orimulsion.html

3. Field Support and Training
http://www.spiltec.com

# APPENDIX A
# POLITICAL AND PROCEDURAL CONSIDERATIONS

## A.1 HISTORICAL HURDLES

The first major oil spill in which ISB attempted was the 1967 *T/V TORREY CANYON* incident in Great Britain. The results were unsuccessful due to emulsification of the oil and set the stage in discouraging others from trying ISB in subsequent responses. During the response to the *T/V ARGO MERCHANT* incident in 1973 off Nantucket Island, Massachusetts, two attempts were made to ignite the No. 6 fuel oil slick discharged from the grounded tankship. Both attempts failed to sustain a burn and, consequently, further efforts were terminated.

In 1969, Dutch authorities were successful in igniting test slicks at sea and on shore. In 1970, Swedish authorities were very successful in igniting and burning Bunker C oil from a ship accident that occurred in ice. During the 1970's and 1980's, many studies and tests were conducted on ISB, but the results were varied, and the technology never caught on in favor of mechanical recovery.

On the day following the grounding of the *T/V EXXON VALDEZ* in March 1989, a test ISB of the North Slope Crude was conducted (A. Allen, 1991). Approximately 15,000 to 30,000 gallons of oil from the spill were collected and ignited using fire-resistant boom towed in a U-configuration behind two fishing vessels. The oil burned for a total of 75 minutes and was reduced to approximately 300 gallons of residue. It was estimated that the efficiency of this test burn was 98 percent or better. Continued ISB was not possible because of the change in the oil's state (emulsification) after a storm the following day.

### A.1.1 Lack of ISB Operations and Training Experience

During the 1990's, interest in ISB was revived during the response buildup following the *T/V EXXON VALDEZ* incident. Researchers compiled the results of studies and tests performed to date and identified areas where information shortfalls existed. Studies were conducted that looked at several things: the effects of oil properties and other factors on the ability of oil to burn in-situ; smoke plume constituents and their fate and effects; and the burning of oil in different environments.

The studies and tests conducted during the early to mid-1990's broadened the informational database tremendously, but one crucial aspect of testing proved difficult to accomplish. Full-scale, at-sea experiments were needed to verify the results of small-scale tests and to gain operational experience with ISB equipment and tests. Several at-sea trials were planned but, with the exception of a few cases in Canada and Northern Europe, governmental approvals of applications submitted in advance of the tests were not granted and responders were left to speculate as to the true viability of the technology.

### A.1.2 Public Perceptions

Public perception over public health concerns has worked against the use of ISB technology since it was first used during the *TORREY CANYON* incident. The concerns relate to the

chemical content of the smoke plume and the downwind deposition of particulates. ISB produces large amounts of dark smoke and, regardless of the science that has come out of the conducted studies, the perception exists that the soot particles in the smoke residue represent a risk to downwind population centers and the environment. There is also concern that the unburned oily residue represents an unacceptable environmental risk.

Over the years, advocates for the use of ISB technology have attempted to conduct public awareness and education programs presenting the facts and tradeoffs surrounding the technology. These efforts had some positive impact, but they often coincided with attempts to gain approval prior to testing or actual responses and they were overshadowed by the misconceptions about ISB.

In recent years, the RRTs and Area Committees have taken the lead to preplan for the use of ISB. Stakeholder workshops have been conducted to discuss the science behind ISB and to remove the hysteria. They have taken the added step of going through the regulatory approval process to gain preapproval in designated areas. It appears that these efforts have paid dividends, and that public perception may be changing in favor of the ISB technology.

### A.1.3 Race Against Time

ISB is effective for only a limited time after the spill occurs. Times vary greatly depending on a number of factors; however, the fresher the oil, the greater the chance of a successful burn operation. Obtaining preauthorization to burn in selected areas greatly enhances the probability that a burn will be conducted successfully. The chances of success are even better where government and industry have worked together prior to the spill to develop procedures and pre-stage equipment.

## A.2 AGENCY/ORGANIZATION ROLES AND RESPONSIBILITIES

### A.2.1 Principal Federal Agencies

The principal federal agencies with jurisdiction over ISB operations include the U.S. Coast Guard (USCG), the U.S. Environmental Protection Agency (USEPA), the Department of Commerce (DOC), and the Department of the Interior (DOI). The USCG provides, through delegated authority to USCG Captains of the Port, the pre-designated FOSCs for the coastal zone regions of the United States. The FOSC can approve use of ISB under subpart J of the National Contingency Plan with the concurrence of both the USEPA representative on the applicable RRT and the state(s) with jurisdiction over waters threatened by the release or discharge, and in consultation with the DOC and DOI natural resource trustees.

### A.2.2 State Agencies

States must concur with the FOSC's decision to use ISB technology for spills that either occur within them or are a threat to them. As prescribed in a state's governmental laws and regulations, several agencies often have roles and responsibilities for ISB. State governments select a lead agency to represent the Governor and all state agencies on the applicable RRT. Concerns of all agencies are directed to the lead agency for presentation at RRT forums.

### A.2.3 Regional Response Team (RRT) and Area Committees (ACs)

Because of the potential benefits that burning offers and the need for prompt decisions, the NCP specifically requires that both Regional and Area Contingency Plans (ACPs) include applicable preauthorization plans for the use of burning agents and address the specific contexts in which such products should and should not be used. ACPs are required to preapprove specific countermeasures to reduce adverse spill impacts. ISB preplanning is important to ensure that decisions are made rapidly and that implications of other laws and regulations are addressed before the spill.

### A.2.4 Local Stakeholders

Local government agencies are key emergency response elements that protect public health and the environment for most emergencies under the jurisdiction of the National Response System. As a result, they should be included in appropriate positions in the ICS/UC and participate in decisions on whether to conduct ISB operations.

## A.3 AREA COMMITTEE MEMBER AND STAKEHOLDER EDUCATION

Response community education in ISB technology is an essential action that can lead to the acceptance and broader use of the technology. This education can be accomplished by a number of methods including port industry group meetings, stakeholder workshops and government agency newsletters. Several Internet Web sites (see Reference section) that provide a tremendous amount of information about ISB technology have been developed.

### A.3.1 Involvement in Pre-approval Process

During the planning process of drafting the ACPs to meet the Oil Pollution Act of 1990 (OPA 90) requirements, several ACs formed ISB subcommittees to deal with specific issues within the Area's jurisdiction and to coordinate pre-approval with applicable RRTs. Government and industry stakeholders joined these subcommittees and have resolved many of the contentious issues in advance.

### A.3.2 Participation in Training and Exercises

Government and industry groups have sponsored workshops to discuss ISB technology and educate participants in the pros and cons of the technology's use. The Preparedness for Response Exercise Program (PREP) provides another opportunity to expose and educate the response community to ISB technology. During both government-led and industry-led area PREP exercises, the use of ISB as a response technique is often included as an exercise objective. An exercise scenario is developed that is amenable to ISB as a response option. The ICS/UC is given the opportunity to investigate the viability and determine if ISB is appropriate. If so, ACP and RCP procedures and protocols are used to gain the necessary authorization. These exercises provide ISB technology education and awareness as well as a test of the application protocols and procedures.

## A.4 COMMUNITY NOTIFICATION AND EDUCATION

The better and sooner a community is educated and informed of a pending ISB operation, the more likely they will be to support it.

### A.4.1 Press Releases and Press Conferences

A press release is a relatively easy method for disseminating information about an upcoming ISB operation to a variety of media sources. To expedite the press process during an incident, pertinent background information should be gathered in the pre-planning stage, and advance press releases should be prepared and filed for use during an incident. The Information Officer should establish notification procedures to quickly disseminate press releases. Public service announcements on local radio and television stations can also be effective in quickly informing the public. Use of public service announcements can often be coordinated very quickly through emergency management personnel at local Emergency Operations Centers that have procedures in place to quickly notify the public. As it is appropriate, the media should be given the opportunity to view and report on ISB operations. If only limited access is possible, media pool reporters and photographers/videographers can be assigned to cover and report on the operations, and then share their material with other media.

Press conferences require more effort to set up and more time to coordinate but are useful if it is anticipated that issues or questions exist which cannot be adequately addressed in a press release. Press conferences permit the FOSC and Unified Command members to speak directly to the public through the media and convey a feeling that the incident response is being actively and effectively managed. Providing the media with information on ISB in advance of the press conference will educate them on ISB, assist in directing their questions, and serve as a useful reference tool. Many federal, state, and private organizations have developed background papers and handouts on ISB (see the Reference section Web sites).

### A.4.2 Community Outreach/Town Meetings

The Information Officer's staff should continually monitor and analyze media coverage and incoming telephone and fax communications to keep attuned to both the media's and local community's concerns with ISB operations and especially health and safety issues. Media releases, fact sheets, and press conference presentations should then be prepared to properly address and alleviate these concerns and gain community support.

Meetings with local government officials and identified stakeholder groups to discuss ISB operations issues should be considered. The Liaison Officer, the Information Officer, and contingency planners, who have worked with these groups during the pre-planning activities, should be consulted for input on the groups and individuals who should be involved in community outreach programs.

If public meetings are conducted, the FOSC and members of the UC should plan to attend and be prepared to brief attendees on ISB issues. ICS/UC staff should also attend and be prepared to address detailed questions; however, a Command presence shows a genuine concern for the public welfare. Fact sheets should be available for distribution. The Information Officer, when

scheduling the meeting, should determine which stakeholder groups will attend and which key issues need to be addressed. Media should always be invited to attend town meetings. When preparing for a public meeting, some important points to consider include:

- Determine the message that is to be communicated and prepare a strong opening statement that delivers that message
- Assign a spokesperson to speak on behalf of the UC
- Anticipate questions and rehearse responses
- Assign appropriate ICS/UC staff to respond to anticipated detailed issues
- Assemble necessary handouts and other materials
- Assign a moderator to facilitate and control the meeting.

### A.4.3 Marine and Air Advisories

It is important to provide a means of on-site notification as some commercial mariners and boaters may not have had prior notification. Before and during burn operations, the response activity should be coordinated with the local airports, the FAA, and the USCG. Notification can be accomplished through Broadcast Notices to Mariners (BNTMs), Urgent Marine Information Broadcasts (UMIBs), and Notices to Aviators. In addition, crewmembers aboard patrol boats enforcing safety or exclusion zones should be prepared to notify mariners of the ISB operations through loudhailers.

# APPENDIX B
# LESSONS LEARNED AT GALVESTON ISB EXERCISES

The USCG sponsored three ISB exercises off the coast of Galveston, Texas to demonstrate and investigate the safe, effective, and efficient implementation of promising ISB operational procedures and tactics. Oranges were used to simulate floating oil. Lessons learned based upon these field exercises are summarized below (References: Camlin, 2000 - 2001).

## B.1 ORGANIZATIONAL

The National Interagency Incident Management System (NIIMS) ICS organizational structure provided an effective mechanism for blending diverse resources needed to plan and execute the exercises. It provided good organizational structure for proper unity, chain of command and span of control. The Incident Action Plans were organized for both the strategic and daily tactical operations and assignment of resources.

## B.2 CONTRACTING

It is very important to have contracts in place for vessel and aircraft support before implementing ISB in a timely manner.

## B.3 AIR OPERATIONS

Helicopters provided three vital functions:

- Real-time video link to the Command Center
- Spotters
- Heli-torch missions

Comments on Heli-torch operations:

- Operations required a 3-person ground crew to mix the gelled fuel and properly attach it to the helicopter.
- A 50-foot deployment height worked best with the Heli-torch operations.

## B.4 SURFACE OPERATIONS

The Pollution Incident Simulation and Control Exercise System (PISCES) Decision Support System was used to track five vessels in real time.

The vessels had difficulty maintaining a boom-towing speed less than 1 knot due to the high clutch speed of the ships. This resulted in a loss of some oranges, which simulated oil. A current meter helped monitor each vessel's speed relative to the water.

When the vessel backed down, the water supply hose for the actively cooled fire-resistant boom was wrapped around a propeller and damaged the boom. A spotter on the stern with direct communications with the wheelhouse prevented this from happening on subsequent exercises.

- Narrowing the opening of the U-shaped boom and increasing the speed will thicken the oil for a more efficient burn.

- Widening the U-shaped boom and decreasing speed will increase the burn area and burn rate.

The funnel boom configuration using conventional boom consolidates oil so multiple fire-resistant booms are not needed. The fire-resistant boom is used only for burning oil and not for oil collection.

The coordinated task force operation was a more promising tactic than independent task forces for the following reasons:

- Good use was made of limited fire-resistant boom.
- Few burn areas were established, thus making the area easier to control and keep secure.
- More conventional boom-trained operations personnel were required and available.
- Fewer ICS span of control issues arose.
- Minimal site safety adjustments were required if the wind shifts.
- Oil was brought to the burn site more efficiently, allowing for faster cycling with conventional boom.

## B.5 TRAINING

Just-in Time video training was effective at quickly acclimating ad hoc members of the work group. This video, in the form of a compact disk (CD), is available from the USCG R&D Center, Avery Point, Groton, CT.

Additional training needs were identified for:

- Fire-resistant boom deployment and towing
- Funnel V-shape boom configuration and towing
- ISB spotting support, such as color and oil thickness determinations
- Heli-torch operations
- Multiple feeder task force operations

## B.6 TYPICAL RESPONSE TIMES

Data from three ISB exercises were consolidated to present typical response times and vessel speeds to assist with the planning process (Table B-1).

Table B- 1. Typical ISB response times/vessel speed by function.

| Function or Activity | Time/Speed |
|---|---|
| Load ISB equipment, one reel onto vessel and secure (no problems) | 1.5 - 2.5 hours |
| Load ISB equipment onto vessel (modifications to the vessel required) | 6 hours |
| Average boom/tow vessel transit speed | 8 knots |
| Deployment of boom in U-shaped configuration | 1.2 - 1.75 hours |
| Lag time (from activation of ISB Work Group to deployment 16 nautical miles out) | 6 - 10 hours |
| Boom towboat maneuvering speed variations (some oil loss) | 0.2 - 4 knots |
| Coordinated Task Force Feeder Cycle (Using J-Release and 0.5 nautical mile transit; cycle time from collecting one spillet to the next spillet) | 1.25 - 1.5 hours |
| Coordinated Task Force Feeder Cycle (Using Towline Release and 0.5 nautical mile transit) | 1 hour |
| J Release (from U to J release) | 8 - 12 minutes |
| Towline release was faster than the J release (time per Feeder Cycle) | 30 minutes faster |
| Deploy a wide V-shaped funnel (two 1,000 ft boom legs, 50 ft bridle at apex with sweep width of 750 ft between tow vessels) | 1.5 - 2.6 hours |
| Recovery of V-shape funnel boom system described above | 1 hour |
| Recovery of actively cooled fire boom (500 ft on reel) | 0.8 - 1.25 hours |
| Helibase ready-for-ISB operations (using local qualified crew) | 2 - 3 hours |
| Heli-torch helicopter transit (12 nautical mile transit) | 10 minutes |
| Reloading of the Isolair Heli-torch fuel | 3 minutes |

# APPENDIX C
# FIRE-RESISTANT BOOM BY MANUFACTURER

The following are examples of fire-resistant boom (listed alphabetically) that are commercially available in the United States and have been involved in recent fire-resistance testing. Any potential omission of fire boom currently on the market is not an indication that it will not be effective.

## C.1 AMERICAN MARINE FIREBOOM

This boom was formerly known as the 3M boom after the company that originally developed it. The boom consists of flotation sections made of rigid ceramic foam. The flotation elements are covered by two layers of stainless steel knitted mesh, a ceramic textile fabric and a PVC outer cover (Figure C-1). The outer cover is designed to protect the inner layers from abrasion during handling and deployment and, not being fire-resistant, will melt away when exposed to fire.

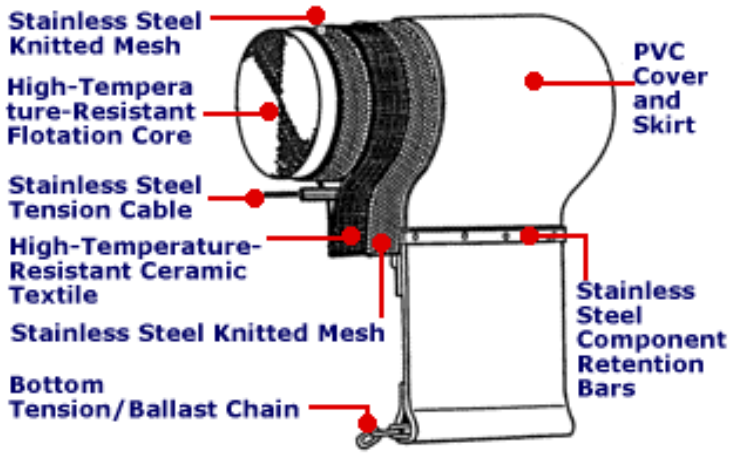


Figure C-1. American Marine Fireboom design.

The PVC material also extends below the floats to form the skirt. A stainless steel tension cable provides strength immediately below the flotation element, and a chain along the bottom of the skirt provides additional tensile strength and ballast. The boom is available in a variety of packaged configurations:
20-foot ISO containers, storage/deployment trays, and air-transportable containers. Figure C-2 shows the boom during a burn. Models available are listed in Table C-1.

Figure C-2. American Marine Fireboom during burn.

Table C-1. American Marine Fireboom dimensions.

| **Manufacturer** | **Elastec/American Marine** | | |
|---|---|---|---|
| **Model** | **American Marine Fireboom** | | |
| **Type** | **Intrinsically Fire Resistant** | | |
| Height (in.) | 20 | 30 | 42 |
| Freeboard (in.) | 5.5 | 9 | 15 |
| Draft (in.) | 14.5 | 21 | 27 |
| Section length (ft) | 50 | | |
| End connectors | ASTM | | |
| Weight (lb/ft) | 5.1 | 8.4 | 15.3 |
| Storage volume ($ft^3$/ft) | 0.7 | 1.4 | 3.2 |

### C.1.1 Summary of Testing

Testing was conducted at the National Response Center (NRC) Outdoor Maneuvering Basin in Ottawa, Canada with propane burners (orange cover removed).

Various versions of this boom have been tested many times over the last 15 years. Based on field tests at the Newfoundland Offshore Burn Experiment (NOBE) and flame testing in waves in accordance with ASTM F2152-01, it is expected that boom sections exposed to flames will require replacement after three to four individual burns (McCourt, et al., 1998).

### C.1.2 Manufacturer Information

Elastec/American Marine
401 Shearer Boulevard
Cocoa, FL 32922

Tel: 321-636-5783
Email: jpearce@elastec.com
Web: www.elastec.com

## C.2 AUTO BOOM FIRE MODEL

The Auto Boom Fire Model consists of several layers of fire-resistant material - stainless steel mesh and refractory matting - over a coated glass fabric flotation chamber (Figure C-3). The skirt is made of a polyurethane fabric. A chain, located at the bottom of the skirt, provides tensile resistance and ballast. The boom is stored on and deployed from a reel. The boom is inflated from one end as it is deployed. Figure C-4 shows the boom during a burn. Models available are listed in Table C-2.

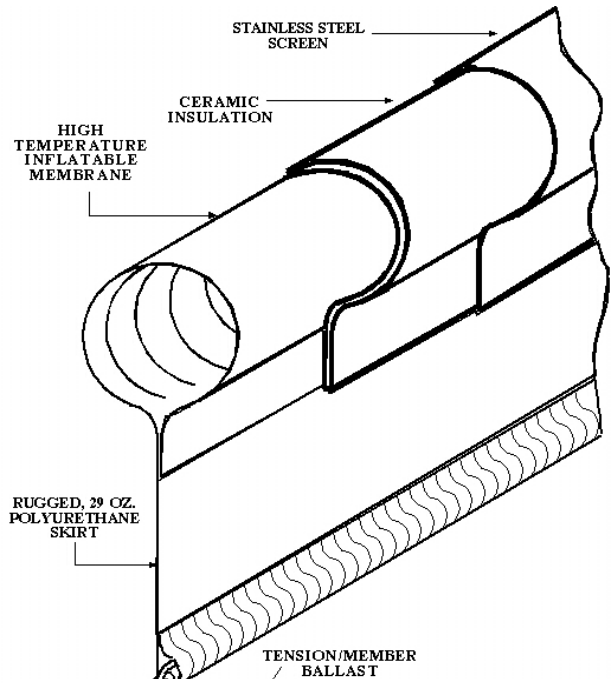


Figure C-3. Auto Boom Fire Model.

Figure C-4. Auto Boom Fire Model during burn.

Table C-2. Auto Boom Fire Model dimensions.

| **Manufacturer** | **Oil Stop L.L.C.** | | | |
|---|---|---|---|---|
| **Model** | **River** | **Harbor** | **Bay** | **Offshore** |
| **Type** | **Intrinsically Fire Resistant** | | | |
| Height (in.) | 22 | 30 | 37 | 43 |
| Freeboard (in.) | 8 | 12 | 15 | 18 |
| Draft (in.) | 14 | 18 | 22 | 25 |
| Section length (ft) | 50 | | | |
| End connectors | Various, as per customer request | | | |
| Weight (lb/ft) | 4 | 6 | 8 | 10 |
| Storage volume ($ft^3/ft$) | 0.4 | 0.5 | 0.7 | 0.8 |

### C.2.1 Summary of Testing

Testing was conducted at OHMSETT with propane burners.

Based on flame testing in waves in accordance with ASTM F2152-01, it is expected that these older model booms exposed to flames will require replacement after one to two individual burns (Buist, et al., 2001).

### C.2.2 Manufacturer Information

Oil Stop L.L.C.
1209 Peter's Road, Building 6
Harvey, LA 70058

Tel: 504-361-4321
Email: oilstop@aol.com
Web: www.oilstop.com

## C.3 HYDRO-FIRE BOOM

The Hydro-Fire boom (Figure C-5) is an actively cooled, inflatable boom that is designed to be stored on and deployed from a reel. The boom is constructed much as a conventional curtain boom, but with a fire-protection layer blanketing the above-water portion and about one-third of the skirt under the water. During use, water is pumped from both towing vessels to the boom, although either pump is capable of providing sufficient water for cooling during a burn. At the boom, the water is distributed through the fire-protection layer, saturating and cooling it. The boom is shown during a burn in Figure C-6. Models available are listed in Table C-3.

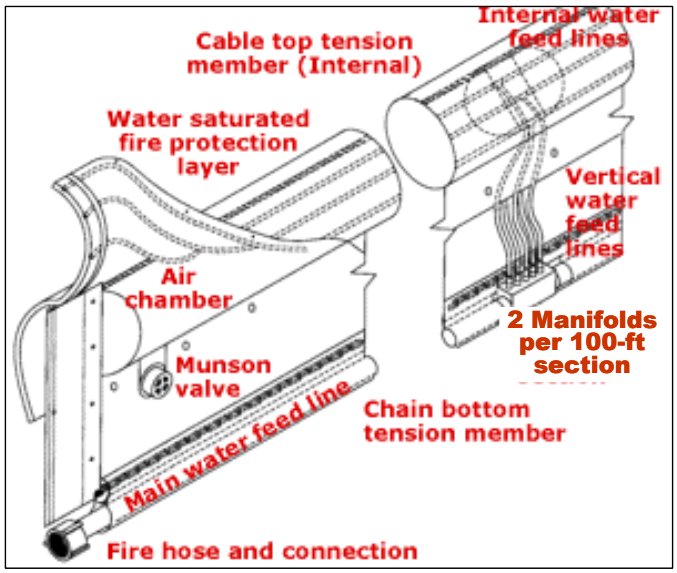


Figure C-5. Hydro-Fire Boom.

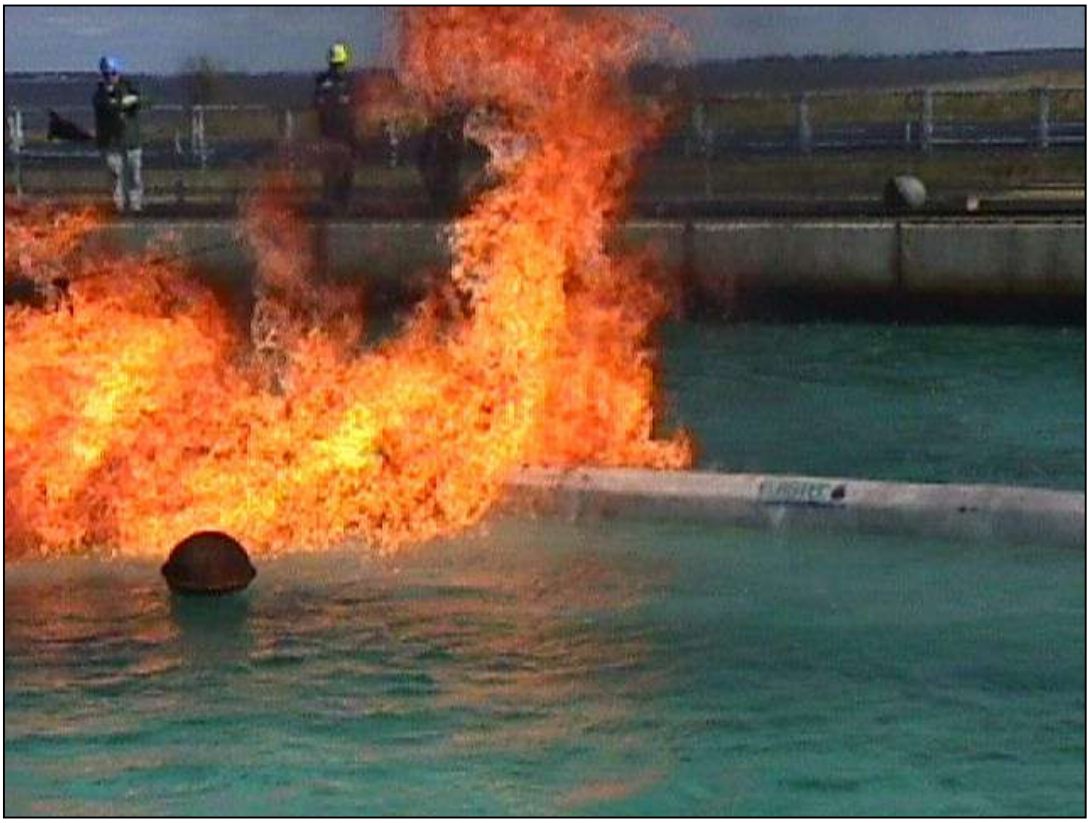

Figure C-6. Hydro-Fire Boom during burn.

Table C-3. Hydro-Fire Boom dimensions.

| **Manufacturer** | **Elastec/American Marine** |
|---|---|
| **Model** | **Hydro-Fire Boom** |
| **Type** | **Actively Cooled** |
| Height (in.) | 31 |
| Freeboard (in.) | 10 |
| Draft (in.) | 21 |
| Section length (ft) | 100 |
| End connectors | Universal |
| Weight (lb/ft) | 8 |
| Storage volume ($ft^3$/ft) | -- |

### C.3.1 Summary of Testing

Testing was conducted at OHMSETT with propane burners.

Based on flame testing in waves in accordance with ASTM F2152-01, it is expected that this boom would survive a large number of ISB operational burns providing that the water flow to cool the boom is continuously maintained (Stahovec, et al., 1999).

### C.3.2 Manufacturer Information

Elastec/American Marine
401 Shearer Boulevard
Cocoa, FL 32922

Tel: 321-636-5783
Email: jpearce@elastec.com
Web: www.elastec.com

## C.4 POCKETBOOM

Pocketboom is used in conjunction with non-fire boom to form a "pocket" in which the oil is boomed. This boom is a scaled-down redesign of the Dome stainless steel fire boom, which was developed and tested extensively in the 1980's. The boom consists of alternating flotation and connector sections and uses all stainless steel construction (Figure C-7). The flotation sections are air-filled chambers at ambient pressure; these are joined by connector sections that are hinged, corrugated stainless steel. An articulated box-beam runs through the corrugated material to provide tensile resistance. A lifting frame and harness are available to facilitate safe and effective launching and recovery. Figure C-8 shows the boom during a burn.

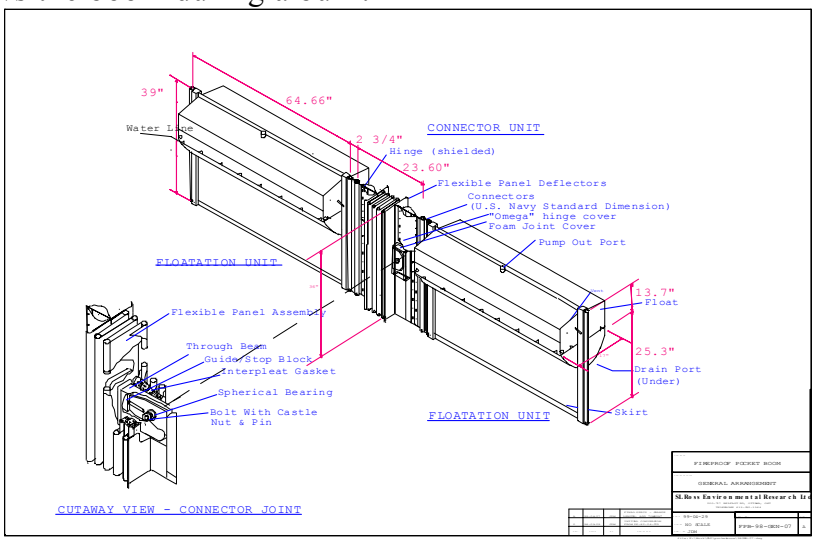


Figure C-7. Pocketboom.

Figure C-8. Pocketboom during burn.

Table C-4. Pocketboom dimensions.

| **Manufacturer** | **Applied Fabrics Technologies, Inc.** |
|---|---|
| **Model** | **PocketBoom** |
| **Type** | **Intrinsically Fire Resistant** |
| Height (in.) | 39 |
| Freeboard (in.) | 12.2 |
| Draft (in.) | 25.2 |
| Section length (ft) | 7.8 |
| End connectors | Navy |
| Weight (lb/ft) | 27 |
| Storage volume ($ft^3$/ft) | -- |
| Comments | Available with lifting frame and harness to facilitate deployment of pre-connected sections |

### C.4.1 Summary of Testing

Based on flame testing in waves in accordance with ASTM F2152-01, it is expected that this boom would survive multiple ISB operational burns without noticeable degradation. (Buist, et al,. 1999).

### C.4.2 Manufacturer Information

Applied Fabrics Technologies, Inc.
P.O. Box 575
Orchard Park, NY 14127

Tel: 716-662-0632
Email: Oilfence@aol.com
Web: http://www.appliedfabric.com/index.html

## C.5 PYROBOOM

The PyroBoom (Figure C-9) has a freeboard constructed of a refractory material and a skirt made of a conventional urethane-coated material. Hemispherical stainless steel floats are attached to each side of the boom. Modular construction of the boom allows for maintenance and repair of the boom in the field. Figure C-10 shows the PyroBoom during a burn.

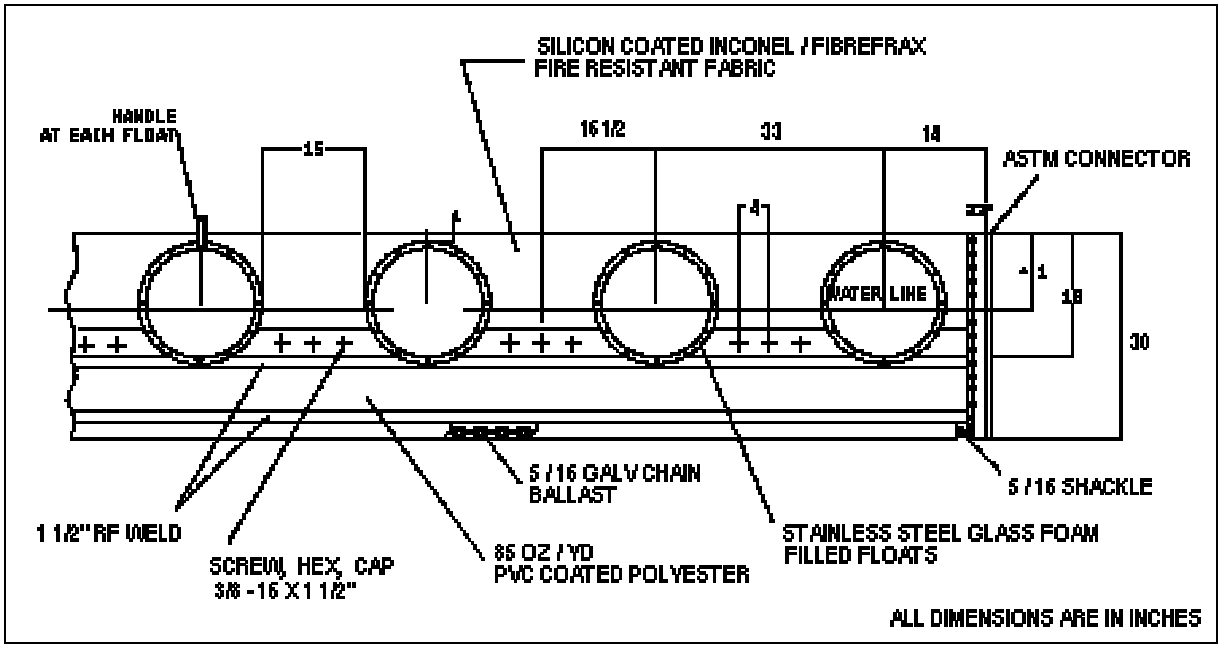


Figure C-9. PyroBoom.

Figure C-10. PyroBoom during burn.

Table C-5. PyroBoom dimensions.

| **Manufacturer** | **Applied Fabrics Technologies, Inc.** |
|---|---|
| **Model** | **PyroBoom** |
| **Type** | **Intrinsically Fire Resistant** |
| Height (in.) | 30 |
| Freeboard (in.) | 11 |
| Draft (in.) | 19 |
| Section length (ft) | 100 |
| End connectors | ASTM |
| Weight (lb/ft) | 8.5 |
| Storage volume ($ft^3$/ft) | -- |

### C.5.1 Summary of Testing

Based on flame testing in waves in accordance with ASTM F2152-01, it is expected that boom sections exposed to flames would require replacement after three to four individual burns (Walton, et al., 1998 and 1999).

### C.5.2 Manufacturer Information

Applied Fabrics Technologies, Inc.
P.O. Box 575
Orchard Park, NY 14127

Tel: 716-662-0632
Email: Oilfence@aol.com
Web: http://www.appliedfabric.com/index.html

## C.6 SEACURTAIN FIREGARD

This boom uses a heavy-gauge, stainless steel coil covered with a high temperature refractory material to make up the flotation sections of the boom. The skirt is made of a polyurethane-coated polyester or nylon fabric (Figure C-11). The boom is designed to be stored on a reel, and, as it is pulled off the reel during deployment, the stainless-steel coil springs from a flattened position and causes the boom to self-inflate. Figure C-12 shows the SeaCurtain FireGard during a burn. Models available are listed in Table C-6.

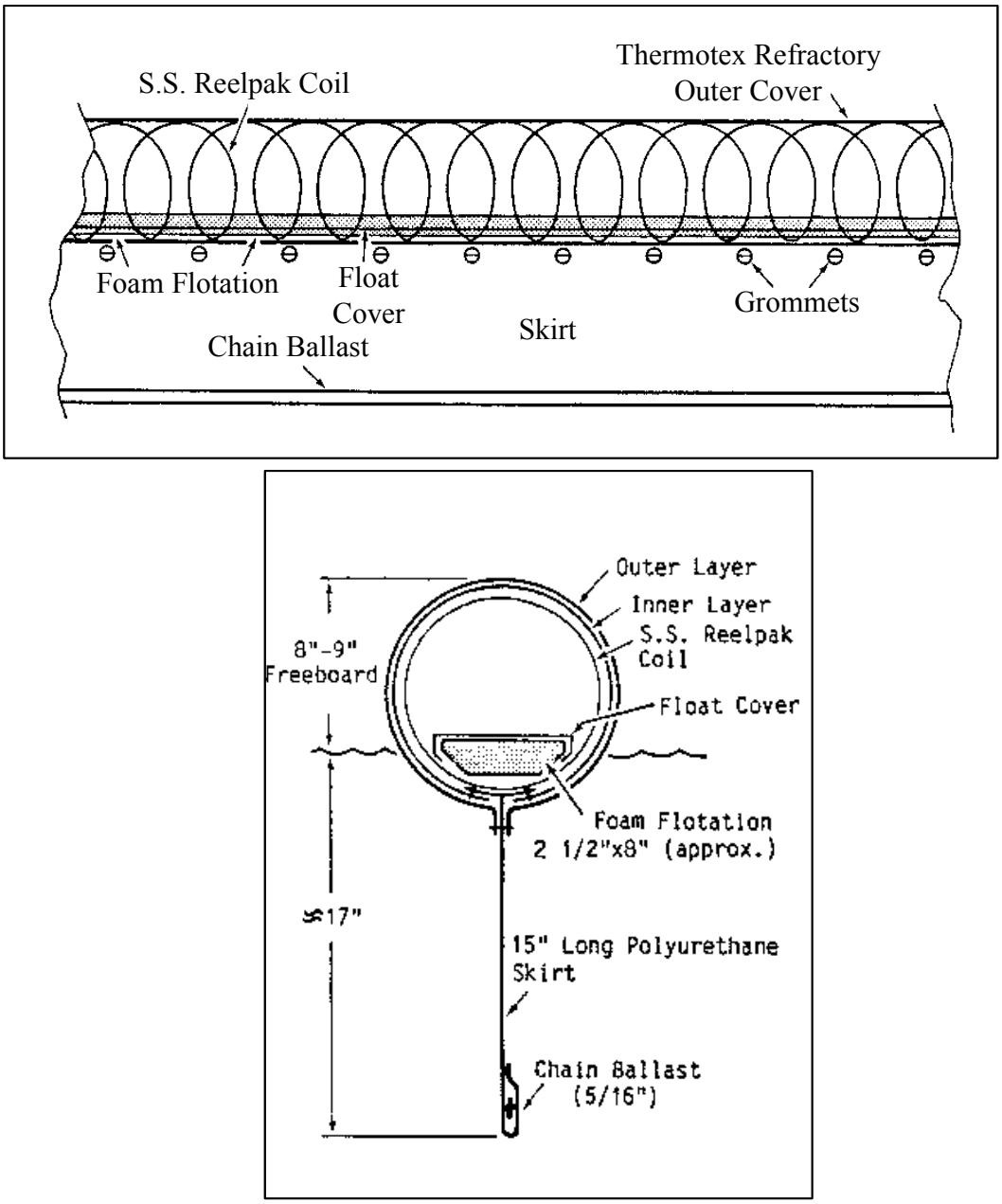


Figure C-11. SeaCurtain FireGard.

Table C-6. SeaCurtain FireGard dimensions.

| **Manufacturer** | **Kepner Plastics Fabricators, Inc.** |
|---|---|
| **Model** | **SeaCurtain FireGard** |
| **Type** | **Intrinsically Fire Resistant** |
| Height (in.) | 20 |
| Freeboard (in.) | 6 |
| Draft (in.) | 14 |
| Section length (ft) | 100 |
| End connectors | ASTM |
| Weight (lb/ft) | 2.2 |
| Storage volume ($ft^3$/ft) | 0.12 |

### C.6.1 Summary of Testing

Based on flame testing in waves in accordance with ASTM F2152-01, it is expected that boom sections exposed to flames would require replacement after one individual burn (Walton, et al., 1999).

Figure C-12. SeaCurtain FireGard during burn.

### C.6.2 Manufacturer Information

Kepner Plastics Fabricators, Inc.
313 Lomita Boulevard.
Torrance, CA 90505

Tel: 310-325-3162
Email: kpfinc@aol.com
Web: http://www.kepnerplastics.com/

## C.7 WATER-COOLED FIRE BOOM

The Water-Cooled Fire Boom (see Figure C-13) is an inflatable actively cooled boom. During use, seawater is pumped from the towing vessel to the boom. Within the boom, a series of hoses circulate the water to cool the boom and allow it to withstand the effects of the fire. The flotation chamber is insulated with a ceramic blanket covered with a stainless steel mesh. The skirt is made of a polyurethane fabric. A chain is located at the bottom of the skirt, and provides tensile resistance and ballast. The boom is designed to be stored on and deployed from a reel. Figure C-14 shows the Water-Cooled Fire Boom during a burn.

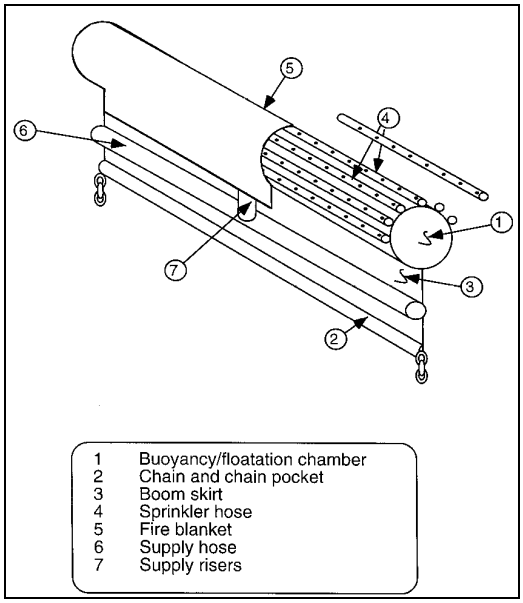


Figure C-13. Water-Cooled Fire Boom.

Table C-7. Water-Cooled Fire Boom Dimensions.

| **Manufacturer** | **Oil Stop L.L.C.** | |
|---|---|---|
| **Model** | **Harbor** | **Offshore** |
| **Type** | **Actively Cooled** | |
| Height (in) | 30 | 43 |
| Freeboard (in) | 12 | 18 |
| Draft (in) | 18 | 25 |
| Section length (ft) | 50 | |
| End connectors | Various, as per customer request | |
| Weight (lb/ft) | 8 | 10 |
| Storage volume ($ft^3$/ft) | 0.06 | 0.7 |

Figure C-14. Water-Cooled Fire Boom During Burn.

### C.7.1 Summary of Testing

Testing was conducted at OHMSETT with propane burners.

Although the boom itself has not been tested, Oil Stop's fire blanket concept was tested in flames and waves. Based on those tests, done in accordance with ASTM F2152-01, it is expected that this boom would survive a large number of ISB operational burns providing that water flow to cool the boom is continuously maintained (Stahovec, et al., 1999; Buist, et al., 2001).

### C.7.2 Manufacturer Information

Oil Stop L.L.C.
1209 Peter's Road, Building 6
Harvey, LA 70058

Tel: 504-361-4321
Email: oilstop@aol.com
Web: www.oilstop.com

# APPENDIX D
# CALCULATIONS

## D.1 OIL SURFACE AREA ESTIMATION

Use the nomogram provided in Figure D-1 to calculate the burn or slick area of a typical U-shaped boom. For a V-shaped boom, use the area from Figure D-1 and divide by 2. Areas in a towed U-shaped boom can be approximated by estimating the distance from the back of the boom pocket to the leading edge of the flames, multiplying by the width of the flames across the boom (or the sweep width), and then multiplying by 0.8.

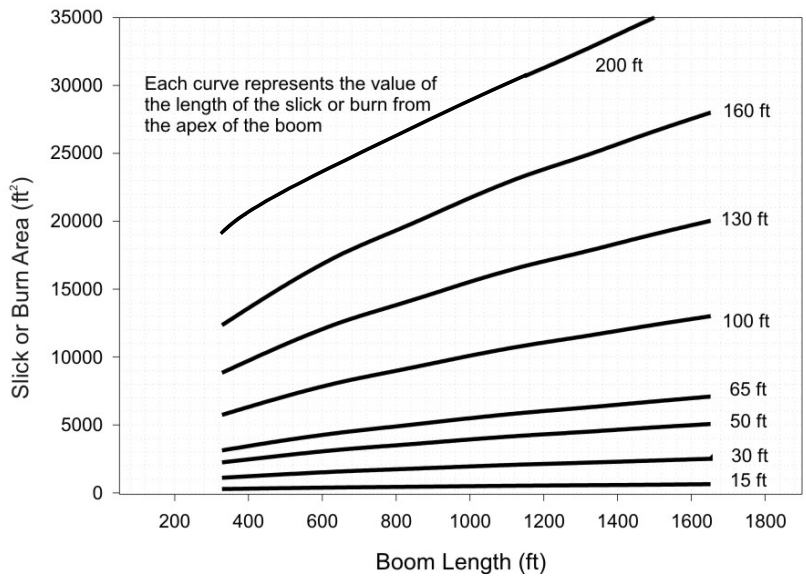


Figure D-1. Calculate slick/burn area, U-shaped boom (Fingas and Punt, 2001).

## D.2 BURN VOLUME CALCULATIONS

The volume of oil in a boom is determined by multiplying the area times the thickness; however the thickness is difficult to estimate. Another method is to calculate the oil recovery rate as discussed in Section D.3. A more accurate method to determine the volume of burned oil, however, is to measure the area of the fire and the duration of the burn. The burn rate is determined by Table D-1.

.

Table D-1. Burn/removal rates for large fires.

| Oil Type/Condition | Burn/Removal Rate |
|---|---|
| Gasoline >10 mm (0.4 in.) thick | 4.5 mm/min (0.18 in./min) |
| Distillate Fuels (diesel and kerosene) >10 mm (0.4 in.) | 4.0 mm/min (0.16 in./min) |
| Crude Oil >10 mm (0.4 in.) thick | 3.3 mm/min (0.14 in./min) |
| Heavy Residual Fuels >10 mm (0.4 in.) thick | 2 mm/min (0.08 in./min) |
| Slick 5 mm thick* | 90 percent of rate stated above |
| Slick 2 mm thick* | 50 percent of rate stated above |
| Emulsified oil (percent of water content) | Slower by the water content percent of the rate specified above |
| Estimates of Burn/Removal Rate are based on experimental burns and should be accurate to within ±20 percent. | |

* Thin slicks will naturally extinguish, so this reduction in burn rate really applies only at the end of a burn

If ignited, emulsions will burn at a slower rate almost proportional to their water content (a 25 percent water-in-crude-oil emulsion burns approximately 25 percent slower than the unemulsified crude).

Burn rate is also a function of the size of the fire. Crude oil burn rates increase from 1 mm/min with 3-foot fires to 3.5 mm/min for 15-foot fires and greater. For very large fires, on the order of 50 feet in diameter, and larger, burn rates may actually decrease slightly because there is insufficient oxygen in the middle of the fire to support combustion at 3.5 mm/min. The effect of oil type on burn rate disappears as fire size grows to the 50-foot range, for the same air-starvation reason.

For the case of a fire in quiescent conditions where the entire slick area is fully involved, the **volume of oil removed by burning** is determined by Equation D-1:

Equation D-1

$$OR = A \bullet BR \bullet T \bullet 0.024,$$

where:
- OR = Oil Removed (gallons)
- A = Area in (square feet) from Figure D-1, estimated visually, from photos or video
- BR = Burn Rate (mm/min) from Table D-1
- T = Time in minutes
- 0.0245 = Units conversion constant.

It is also useful to record the times when 25, 50, and 75 percent of the slick area is covered by flames during ignition and extinction. If any of these phases takes a significant amount of time in comparison to the time of the fully involved burn (i.e., 10 percent or more), then the amount of oil burned during ignition and extinction needs to be added to that removed during the fully involved stage.

## D.3 ENCOUNTER RATES

Slick encounter rate is a function of slick thickness, slick coverage area, sweep width, and speed of advance. The encounter rate helps the spill planner estimate the following factors:

- How fast the spill area is being covered
- Total area and the area that can be covered during a work period
- How much oil is being contained by each sweep
- Total oil volume that can be recovered during a work period
- The number of sweeps needed for the removal rate desired
- The number of ISB task forces required to burn the recovered oil

A U-shaped sweep can contain oil at speeds no faster than 0.75 to 1.0 knots. Systems using a V-shaped boom at a very shallow angle (about 20 degrees) can contain oil at 1.5 to 2.0 knots. Some systems can be effective above 2 knots, but they require special shape-keeping methods discussed in Section 6.8.1.

Oil Containment Rate (OCR) is a function of the oil encounter rate and the system containment efficiency. Containment efficiency is the percentage of encountered oil that is retained by the system. It accounts for losses due to entrainment and splash over. The calculation of OCR (Equation D-2) assumes that the oil coverage area encountered is 100 percent.

Equation D-2

$$OCR(bbl/hr) = \frac{SOA(knots) \bullet SW(ft)}{6076} \bullet OilTh(mm) \bullet 21570 \bullet Eff(decimal)$$

where:

| | | |
|---|---|---|
| OCR | = | Oil Containment Rate (barrels per hour) |
| SOA | = | Speed of advance (knots) |
| SW | = | Sweep width (feet) |
| OilTh | = | Average oil slick thickness (millimeters) |
| Eff | = | Sweep System Oil Containment Efficiency in decimal format (i.e., 100 percent is 1; 50 percent is 0.5) |

OCR can be used to estimate the amount of time required to recover a spill. The volume of oil recovered is determined by multiplying the OCR by the time (hours) that the system was encountering the spill. Other equipment and logistics limitations must also be considered. What is the maximum oil-containment capacity of the advancing system, and how far must it travel to sweep the oil and then move it to a designated ISB site? If a conventional boom sweep is used, then the oil must be released or funneled into the fire-resistant boom. This type of analysis assists planners in selecting the appropriate types and quantities of advancing systems and fire-resistant boom for the spill incident at hand.

# APPENDIX E
# IGNITION DEVICES

## E.1 SUMMARY DESCRIPTION OF COMMERCIALLY AVAILABLE DEVICES

### E.1.1 Heli-torch Ignition System

The Heli-torch (Table E-1) is a proven ignition system widely used in burning forest slash and setting backfires in fire-control operations. The system consists of a barrel, pump, motor assembly, and propane-fueled igniter, all mounted on a frame that is slung from a helicopter. An electrical connection from the device allows control from the helicopter cockpit.

The Heli-torch emits a stream of gelled fuel, typically gasoline that is ignited as it leaves the device. The burning fuel falls as a stream that breaks into individual globules before hitting the slick. The burning globules produce a flame that lasts for up to 6 minutes, heating the slick and then igniting it.

At maximum pumping rate and uninterrupted use, the total application time is approximately 4 minutes. In practice, pumping of the gelled fuel generally is not done in an uninterrupted stream. The exception to this might be in the case of a highly weathered oil or emulsion.

The amount of gelled fuel required to initiate combustion varies greatly, depending mainly on the degree of weathering and emulsification of the oil. As an example, in the NOBE experiment performed off Newfoundland in 1993, approximately 5 gallons of gelled fuel were used to initiate the burn of 13,000 gallons of lightly weathered oil.

Prior to use, the fuel is gelled by mixing in SureFire gelling agent. Gasoline is the fuel typically used, but alternatives, such as diesel, crude oil, or mixtures of the three fuels, are also effective. Up to 6 pounds of Surefire gelling agent are required per 55-gallon drum, depending on the type of fuel to be gelled, the ambient temperature, and the time available. At freezing temperatures, additional gelling agent and more mixing may be required.

Table E- 1. Heli-torch dimensions.

| Length (in) | Width (in) | Height (in) | Volume | Weight (lb) |
|---|---|---|---|---|
| 85 | 24 | 30 | -- | 190<br>550—when loaded with 55-gallons of gelled fuel |
| 102* | 30* | 39* | -- | 340* |
| * Crated for shipping. | | | | |

#### E.1.1.1 Manufacturer Information

Simplex Manufacturing
13340 NE Whitaker Way
Portland, OR 97230

Tel: 503-257-3511
Web: www.simplexmfg.com

### E.1.2 Simplex Model 901 Handheld Igniter

This igniter was used successfully in an experimental burn in 1996 in England. It consists of a 1-quart polyethylene bottle filled with gelled gasoline. The bottle is fitted with two foam flotation collars (Figure E-1, Table E-2), and a marine handheld distress flare is attached to the outside of the bottle to provide the ignition source. The flare should be positioned such that it extends 1.5 inches beyond the bottle: this allows the user to hold the igniter for 10 to 20 seconds to ensure that it is burning properly before deploying it. The flare is ignited and the device is thrown up current of the slick. The flare burns for approximately 1 minute before it burns through the plastic bottle and ignites the gelled fuel gasoline as it is released from the bottle. The one-minute delay allows time for the igniter to drift into the oil slick, and for the deployment personnel to distance themselves from the burn area.

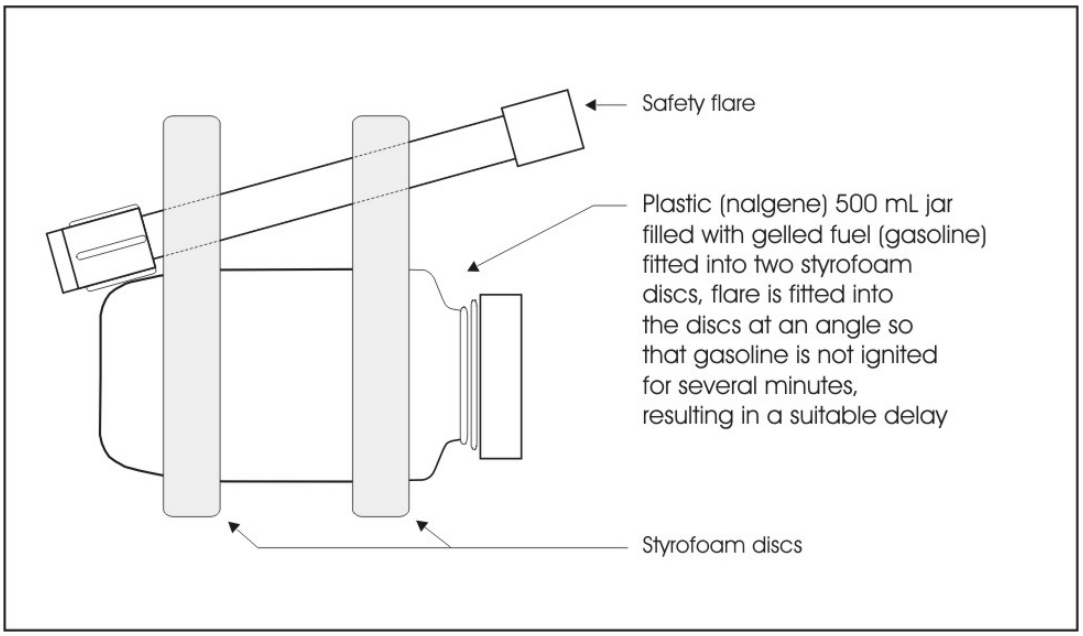


Figure E-1. Simplex handheld flare igniter (Fingas and Punt, 2001).

This device is available from Simplex (contact information below). Alternatively, an ad hoc version of this relatively simple device could be made at the time of a spill with readily available materials.

Table E-2. Simplex handheld igniter model 901 dimensions.

| Length | Width | Height | Volume | Weight |
|---|---|---|---|---|
| 8 in. | 8 in. | 4 in. | 2 $ft^3$ for 12 igniters | Shipping: 5 lb per 12 igniters<br>Use: 1.5 lb per igniter when full of gelled fuel |
| Dimensions estimated | | | | |

#### E.1.2.1 Manufacturer Information

Simplex Manufacturing
13340 NE Whitaker Way
Portland, OR 97230

Tel: 503-257-3511
Web: www.simplexmfg.com

### E.1.3 ESSM Flare-type Igniter

The ESSM Flare-type Igniter IG0010 (Table E-3) is a pyrotechnic device consisting of a mixture of metals, chemicals, and organic binders that ignite by a small amount of energetic compound. An electrical filament connected to the flare ignites this energetic compound that, in turn, lights the metal/binder mixture. The result is a very hot flame that heats and ignites the oil slick. Engaging the safety jumper and power switch activates the igniter. After a timed 2.5 to 5 minute delay, the flare is energized and ignited. The delay allows time for the igniter to drift into the oil slick, and for deployment personnel to distance themselves from the burn area. The igniter is presently being redesigned so that the igniter can be removed from the flare material. This two-piece configuration will allow it to be shipped by air.

Table E-3. ESSM flair-type igniter dimensions.

| Length | Width | Height | Volume | Weight |
|---|---|---|---|---|
| 16 in | 4 in | 4 in | 1 $ft^3$ | 4 lb |

#### E.1.3.1 Manufacturer Information

Cartridge Actuated Devices, Inc.
51 Dwight Place
Fairfield, NJ 07004

Tel: 973-575-1312
Web: www.cartactdev.com

#### E.1.3.2 Additional Information

USN SUPSALV ESSM System In-situ Burn Equipment
Web: http://www.essm.navy.mil/fireboom.htm

### E.1.4 Dome Igniter

This igniter was developed in the early 1980's by Energetex Engineering under contract to Dome Petroleum. It is also known as the tin-can igniter. It consists of a fuel basket with solid propellant and gelled kerosene slabs (also known as barbeque starter) mounted between two metal floats, Figure E-2, Table E-4. It is designed to be thrown by hand on the target slick. Igniting a fuse wire, either with the supplied electric ignition system or with an open-flame lighter, activates the device. The fuse wire burns for approximately 45 seconds to allow the igniter to drift into the oil slick, and for the deployment personnel to distance themselves from the burn area. Once ignited, the solid propellant burns for approximately 10 seconds, after which the gelled kerosene burns for approximately 10 minutes.

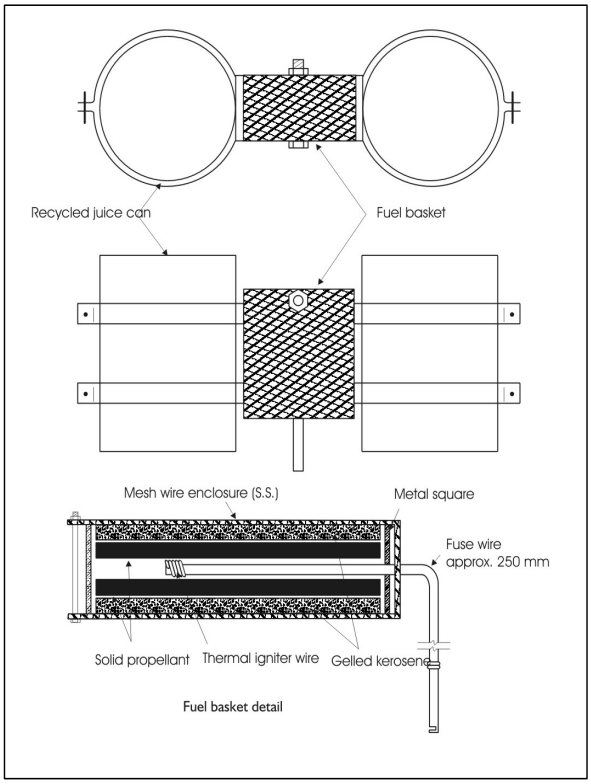


Figure E-2. Dome Igniter (Fingas and Punt, 2001).

The igniter has been classified under the United Nations system for classifying explosives as a Class 1 (explosives code within the Dangerous Goods grouping), Division 3 (pyrotechnic device), Group G material. It must be packaged and labeled as a pyrotechnic firework, and stored in a secure, dry, spark-free area removed from any heat sources or other flammable materials.

Table E-4. Dome Igniter dimensions.

| Length | Width | Height | Volume | Weight |
|---|---|---|---|---|
| 12 in. | 7 in. | 5 in. | 0.25 $ft^3$ | 1 lb |

#### E.1.4.1 Manufacturer Information

Energetex Engineering
276 Old Post Road
Waterloo, ON, Canada
N2J 5B9

Tel: 519-886-2672

# APPENDIX F
# ENVIRONMENTAL EFFECTS OF OIL

Oil, when it is offshore and not removed from the water by ISB or other methods, has serious environmental impacts. The following information should assist with a decision to burn or not to burn the oil from an ecological perspective.

## F.1 OIL SLICKS AND OIL STRANDED ON SHORES

The most visible effects of oil spills are those caused by oil slicks at sea and oil stranded on shorelines. Slicks and stranded oil cause a variety of effects on natural and human-use resources.

Oil slicks on the sea affect species that inhabit or dive through the sea surface. These include marine birds, waders, and marine mammals. Oil affects these animals by physically disrupting the waterproof plumage and pelage or through producing chemical toxicity to the organism if the oil is inhaled or ingested while preening. Effects are dose dependent, although exposure or dosage may be difficult to quantify in some circumstances and exposure thresholds may be difficult to determine precisely. Marine birds and certain mammals, such as sea otters, that depend solely on waterproof plumage or pelage for insulation, appear to be more sensitive to the physical effects of oil than mammals, such as whales, that rely on the insulation properties of a thick layer of subcutaneous blubber. The degree of effects of any spill depend on spill size, oil persistence, environmental conditions (winds and currents), and the sensitivity and vulnerability of local resource populations.

In addition, oil slicks pose a significant risk to human activities, such as shoreline recreation, boating, commercial fishing, and aquaculture. Slicks disrupt fishing activities by oiling fixed gear or by preventing fishermen from retrieving nets or catches through the oil-covered waters. As with the biological effects, the degree and length of impact depends on the sensitivity and vulnerability of the local fisheries as well as on the spill size, oil persistence, and environmental conditions.

Oil slicks generally dissipate naturally on the open sea, lasting only a matter of days to weeks, depending on the size of the spill, the type of oil spilled, and the weather conditions. The recovery rates for resources affected by oil spills vary greatly. The length of time required for populations of seabirds or marine mammals to recover from significant damage is long because of the low reproductive rates of these species.

Oil that becomes stranded on shorelines may have long-lasting effects on the natural biological communities and on the human-use potential of these shorelines. Biological resources may be affected by chemical toxicity or smothering. Oil affects the biological communities of all different shoreline types, but perhaps the most significantly effected are vegetated shorelines, such as marshes and mangroves. Spill effects are important here because the marshes and mangroves provide cover, substrate, and energy for the biological communities that depend on them; consequently, damage to plants may indirectly result in significant damage to other constituents of these communities. In addition, the roots of shoreline vegetation provide stabilization of shoreline sediments; therefore, loss of the plants and their root systems may lead

to the erosion of shorelines and thus lead to longer-term consequences of spills. The effects on marsh plants and mangroves are dose dependent: light oiling may do limited damage causing only short-lived and sub-lethal effects, while heavy oiling, or oiling with light oil possessing a high aromatic content, may cause death to mangrove trees and marsh plants and have long-lasting effects (years).

As with the oil slicks at sea, the effects of stranded oil depend on the level of oiling, the properties of the oil arriving at shorelines, and the sensitivity of the shorelines. Persistence of the oil depends on the degree of exposure of the shore to wave action, oil type, and the type of shoreline substrate. Recovery time for shoreline environments after the spilled oil has been removed may vary from months to many years, depending on the nature of the community affected and the level of damage.

## F.2 WATER-COLUMN AND SEABED EFFECTS

Some oil from a slick becomes dispersed or dissolved in the water column under the slick. There it may ultimately associate with particulate matter and settle through the water column to the seabed. Despite the vast number of laboratory studies that have found toxic effects of dispersed oil or oil-contaminated sediments, significant kills of fish and other pelagic or benthic species have only rarely been found at actual spills, even extremely large ones. Similarly, extensive contamination of seabed sediments and damage to seabed communities are uncommon phenomena during spills.

Extensive fish kills and widespread sub lethal effects, although rare, have been observed during some oil spills that have caused high levels of hydrocarbons in the upper water column. These have resulted from both very large spills and spills of lighter, higher-aromatic-content oil, occurring in shallow or confined near shore waters.

In offshore waters or open coastal waters under average wind conditions (8 to 15 knots), oil usually slowly disperses into the water column. This movement, coupled with the fact that dispersed oil diffuses horizontally and vertically, means that oil concentrations even in the upper few feet of the water column under an oil slick, seldom exceed several hundred parts per billion. This concentration is below the toxic threshold for most significant acute effects on marine organisms. Thus, the threat to fish and other pelagic species from entrained oil is minor in most cases. In cases where fish populations are damaged due to exposure to high levels of hydrocarbons, recovery might require only a few years or less because the reproductive potential of fish is high.

In general, the risks to benthic communities from oil settling on the seabed are limited because:

- Oil is usually entrained into the seabed very slowly.
- Only a portion of the entrained oil becomes associated with large solid particles that will sink.
- Sinking rates of suspended particles are very slow relative to the rates of spreading and diffusion.

As a result, although some spilled oil may ultimately reach the seabed through sedimentation, offshore spills are unlikely to result in extensive local contamination of the seabed to a concentration necessary to cause effects to benthic infauna and epifauna. On the other hand, when seabed sediments do become heavily contaminated with hydrocarbons from spilled oil, contamination can be long lasting, with some hydrocarbons persisting in measurable amounts in sediments for several years. However, once hydrocarbon concentrations return to background levels, benthic communities appear to recover as quickly as pelagic communities.

# APPENDIX G
# HELI-TORCH: SAFE OPERATING PROCEDURES, HELICOPTER AND TRAINING REQUIREMENTS

## G.1 SCOPE

This appendix summarizes the safe operating procedures for use of the Heli-torch. The facility at which the Heli-torch is staged and the fuel prepared, and/or vessel from which the Heli-torch is operated, may have additional safety requirements.

## G.2 SAFE OPERATING PROCEDURES – FUEL MIXING AND HANDLING

The fuels used in the Heli-torch are highly flammable. Proper grounding procedures must be used when transferring fuel, mixing the gelling agent, attaching the fuel barrels to the torch system, and attaching the torch to the helicopter. The helicopter picks up static as it flies through the air and must be grounded as soon as it lands, before the torch is unhooked from the cargo hook. Personnel must not come in contact with the helicopter before it touches down. The Heli-torch barrels must be filled using a non-sparking pump in a well-ventilated area to dissipate fumes. If mixing is done by hand, a wooden or aluminum paddle should be used to prevent sparking. The proper grounding procedures to be followed in the mixing area are shown in Figure G-1.

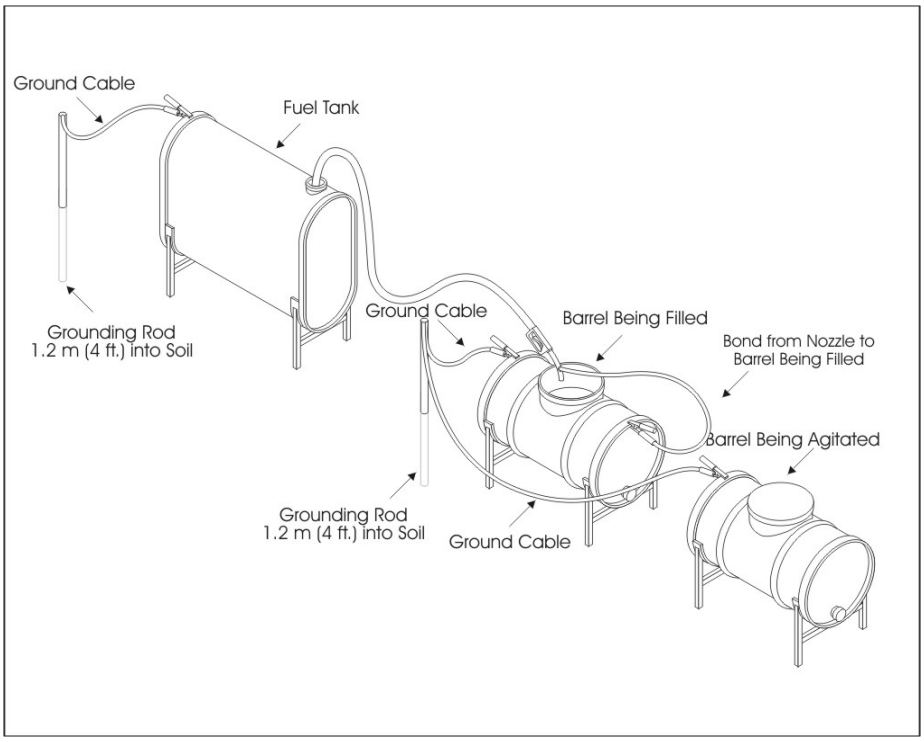


Figure G-1. Grounding procedures for mixing heli-torch fuel (Fingas and Punt, 2001).

A typical Heli-torch fuel mixing area with appropriate safety considerations and signs is depicted in Figure G-2. If sufficient room is not available and the minimum distances cannot be met, mixing should only occur with the helicopter shut down or away from the landing zone.

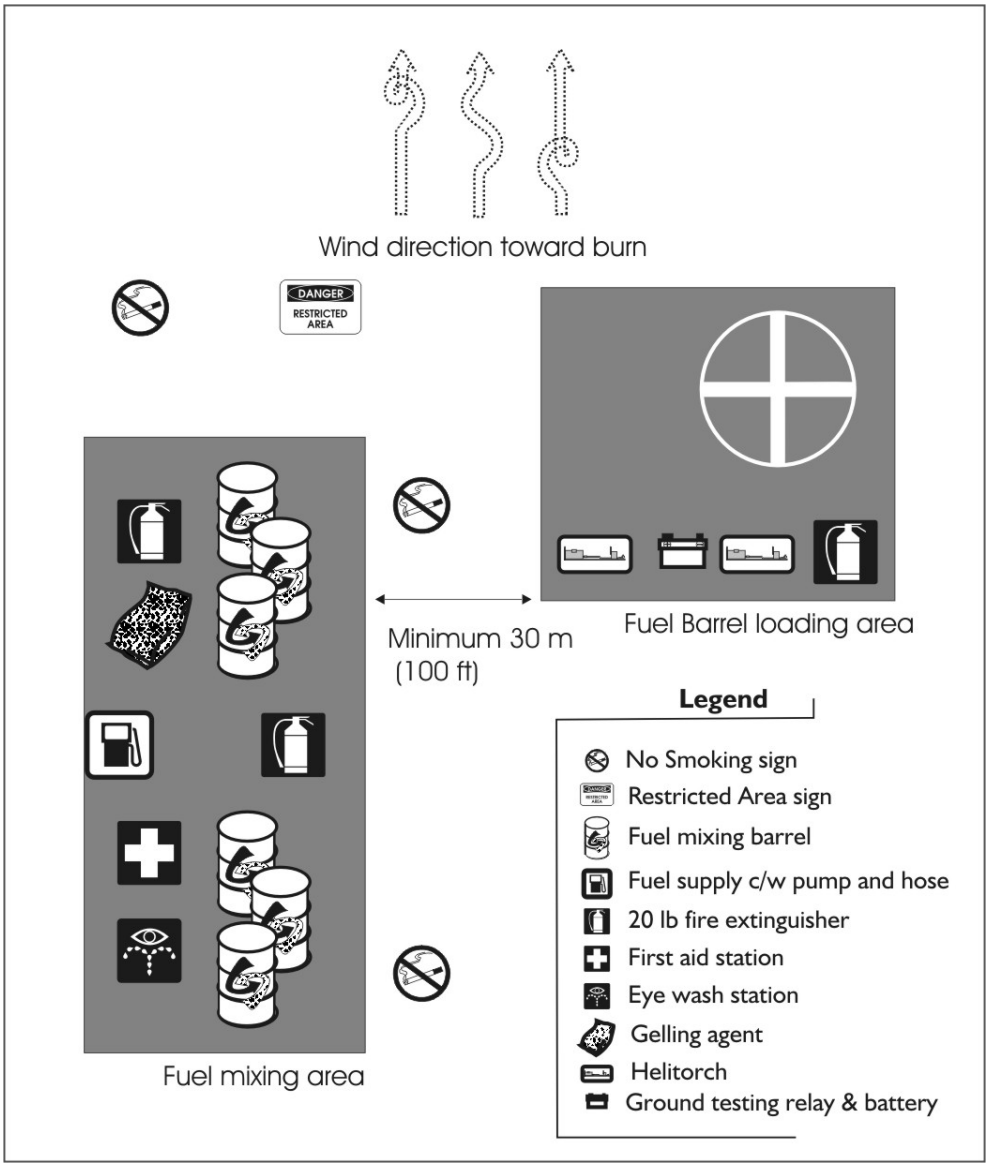


Figure G-2. Typical heli-torch fuel mixing and landing area (Fingas and Punt, 2001).

Correct attachment of the Heli-torch frame to the helicopter is critical for safe operation. The device must remain stable when in flight, but it must also be able to detach quickly if it must be jettisoned in the event of an emergency.

## G.3 SAFE OPERATING PROCEDURES – IGNITER OPERATIONS

Before the Heli-torch is deployed, the water currents and wind conditions should be noted to determine the safest location for the ignition. A pre-flight test should also be carried out at this time to inspect and test the cargo hook, fuel pump, propane discharge, sparkers, and the toggle switch connected to the pilot's cyclic stick.

**In transit to a burn site, the Heli-torch should be carried at a forward speed no greater than 50 knots. When positioning for ignition, the burn site should be approached from an upwind or side-wind direction.**

Before igniting the slick, a pre-determined location should be chosen to perform a test drop of a small amount of ignited gelled fuel. The wind and current direction should be checked again to ensure that the burning gelled fuel does not drift toward any of the operational vessels. If the test burn indicates that the gelled fuel is igniting and falling properly, the pilot should position the helicopter over the desired location, fire the torch on a slow pass as described in Section 6.6.1, and then leave the area. If attempting to ignite heavily weathered oil, the pilot may have to hover over the burn area and release multiple balls of burning gelled fuel in order to concentrate the fire in one location.

The Heli-torch is usually operated by the helicopter pilot. The door on the pilot's side of the helicopter can sometimes be removed to give the pilot a clear view of the Heli-torch. The Heli-torch control switch (toggle switch) should be mounted directly on the cyclic stick at a point where the pilot can comfortably operate it. If operated by someone other than the pilot, extensive training and good use of communications are needed to coordinate the operation.

If the Heli-torch is deployed from a small pad on a ship, these additional precautions should be taken as a minimum:

- When the Heli-torch is ready for pickup and the helipad is clear of other equipment, the Heli-torch supervisor radios the pilot with a request to move into position and pick up the torch.
- If the pad is small and the helicopter returns to replace the spent gelled fuel, it hovers over the helipad so that the Heli-torch can be disconnected. The helicopter then moves away from the ship and hovers while the Heli-torch is removed from the helipad: the helicopter is not permitted to land until the Heli-torch and all other equipment and obstructions are cleared from the helipad. For a large pad, the Heli-torch does not have to be disconnected.
- A three-person fire safety crew should be available on board the ship at all times, as well as a dedicated 150-lb $CO_2$ fire extinguisher. Two 20-lb dry chemical fire extinguishers suitable for extinguishing fuel fires, a first aid burn kit and a spill cleanup kit for any fuel spills should be available at both the mixing and the loading areas. Personnel must wear fire protective clothing, goggles, a dust mask and gloves when mixing and dispensing the gelled fuel and testing the system.

When the ignition session is completed, the pilot disengages the Heli-torch circuit breaker to isolate the toggle switch so that no burning gelled fuel is accidentally dropped. The helicopter then returns to the land- or ship-based Heli-torch deployment site. When the helicopter lands, the recovery crew should stabilize and secure the Heli-torch before the helicopter pilot disconnects the cargo hook. This is an especially important procedure to follow when the gelled fuel barrel is empty because the Heli-torch system can easily be blown off the helipad by the downdraft of the helicopter's rotors.

The Heli-torch must be maintained in good working order at all times. The valve that prevents the fuel from exiting the torch after the pilot has released the toggle switch can become clogged by dust or grit and remain partially open. The valve should be checked and cleaned, if necessary, before each flight. As a further precaution, it is also recommended that the valve be thoroughly cleaned after every third or fourth refuelling of the Heli-torch and that the O-ring in the valve be replaced as soon as it shows any sign of degradation.

In general, all parts of the Heli-torch equipment must be cleaned regularly and any faulty parts must be replaced at the first sign of wear and tear. Spare parts for the Heli-torch must always be available at the burn site.

## G.4 HELICOPTER AND OPERATING COMPANY REQUIREMENTS

### G.4.1 Helicopter Requirements

Helicopters flying in Heli-torch operation should meet the following requirements:

- Must meet all FAA regulations for offshore flight operations, including lifejackets and emergency flotation
- Should remove pilot door when the Heli-torch is being flown to improve visibility of the Heli-torch
- Possess standard radio communications capability including aircraft UHF, VHF, and marine band channels
- Be capable of minimum endurance of 90 minutes while carrying the Heli-torch (with full fuel tank) and no passengers
- Have an adapter to supply the required 24 to 28 Volts direct current (VDC), and allow the Heli-torch plug to be easily connected and disconnected
- Have an FAA-approved cargo hook installation that may be released both electrically and manually and that automatically closes and resets the release mechanism after use. The hook must be rated at the maximum external load capacity of the aircraft.

### G.4.2 Required Certifications

Various certifications are required for operating a helicopter in a Heli-torch operation:

- FAA certification to sling load petroleum
- Pilot must have certification under FAR Part 137
- Company providing helicopter services must have a current FAA Operating Certificate.
- Pilots must:
  - Have an FAA Commercial Pilot Certificate for the appropriate category and class of helicopter
  - Be in compliance with 14 CFR Part 133, Rotorcraft External Load Operations, for Class B rotorcraft-load combinations
  - Have documentation of adequate skills and knowledge per CFR Section 133.37.

## G.5 TRAINING REQUIREMENTS

The pilot and two of the three ground crew personnel should receive a two-day training course, and have at least one of the following three experience qualifications:

- Minimum of 1 year experience as Heli-torch ground crew in the forestry industry
- Minimum of 1 year experience as a helicopter mechanic or flight crew
- Have or recently had a helicopter license

The third member of the ground crew may be a general laborer who receives on-the-job instruction.

The training course recommended by the USCG includes one day of classroom instruction on safe operating procedures for preparing the Heli-torch, mixing the gelled fuel, and igniting an oil slick. The second day includes practical training of these procedures, including practice flights with a loaded Heli-torch.

The ground crew will consist of three personnel, at least two of whom must be trained Heli-torch specialists. The third member may be a general laborer who receives on-the-job instruction from the specialists. The entire crew must be present any time the Heli-torch is being used. While not flying the helicopter, pilots may also serve as Heli-torch specialists, provided they receive the appropriate training.

# APPENDIX H
# SPECIAL MONITORING OF APPLIED RESPONSE TECHNOLOGIES (SMART)

Note: The material in this Appendix is extracted from documentation on the SMART protocols, and contains only the information most relevant to an ISB operation. For further details on SMART, refer to the following Web site URL:

http://response.restoration.noaa.gov/oilaids/SMART/SMART.html

v. 4/2001

𝕊 PECIAL
𝕄 ONITORING of
𝔸 PPLIED
ℝ ESPONSE
𝕋 ECHNOLOGIES

Developed by:

U.S. Coast Guard
National Oceanic and Atmospheric Administration
U.S. Environmental Protection Agency
Centers for Disease Control and Prevention
Minerals Management Service

## H.1 SMART IS A GUIDANCE DOCUMENT ONLY

### H.1.1 Purpose and Use of this Guidance:

This manual and any internal procedures adopted for its implementation are intended solely as guidance. They do not constitute rulemaking by any agency and may not be relied upon to create right or benefit, substantive or procedural, enforceable by law or in equity, by any person. Any agency or person may take action at variance with this manual or its internal implementing procedures. Mention of trade names or commercial products does not constitute endorsement or recommendation for their use by the USCG, NOAA, EPA, Centers for Disease Control (CDC), or the Government of the United States of America.

## H.2 INTRODUCTION

SMART establishes a monitoring system for rapid collection and reporting of real-time, scientifically based information, in order to assist the Unified Command with decision-making during ISB or dispersant operations. SMART recommends monitoring methods, equipment, personnel training, and command and control procedures that strike a balance between the operational demand for rapid response and the Unified Command's need for feedback from the field in order to make informed decisions.

SMART is not limited to oil spills. It can be adapted to hazardous substance responses where particulate air emissions should be monitored and to hydrocarbon-based chemical spills into fresh or marine water.

### H.2.1 General Information on SMART Modules

#### H.2.1.1 General Considerations and Assumptions

Several considerations guided the workgroup in developing the SMART guidelines:

1. SMART is designed for use at oil spills both inland and in coastal zones, as described in the National Oil and Hazardous Substances Pollution Contingency Plan (40 CFR Part 300).

2. SMART does not directly address the health and safety of spill responders or monitoring personnel, since this is covered by the general site safety plan for the incident (as required by 29 CFR 1910.120).

3. SMART does not provide complete training on monitoring for a specific technology. Rather, the program assumes that monitoring personnel are fully trained and qualified to use the equipment and techniques mentioned and to follow the SMART guidelines.

4. SMART attempts to balance feasible and operationally efficient monitoring with solid scientific principles.

5. In general, SMART guidelines are based on the roles and capabilities of available Federal, state, and local teams, and NOAA's Scientific Support Coordinators (SSC). The SSC is often referred to in the document as Technical Specialist. Users may adopt and modify the modules to address specific needs.

6. SMART uses the best available technology that is operationally feasible. The SMART modules represent a living document and will be revised and improved based on lessons learned from the field, advances in technology, and developments in techniques.

7. SMART **should not** be construed as a regulatory requirement. It is an option available for the Unified Command to assist in decision-making. While every effort should be made to implement SMART or parts of it in a timely manner,

**ISB or dispersant application should not be delayed** to allow the deployment of the SMART teams.

8. SMART is not intended to supplant private efforts in monitoring response technologies, but is written for adoption and adaptation by any private or public agency. Furthermore, users may choose to tailor the modules to specific regional needs. While currently addressing monitoring for ISB and dispersant operations, SMART will be expanded to include monitoring guidelines for other response technologies.

9. It is important that the Unified Command agree on the monitoring objectives and goals early on in an incident. This decision, like all others, should be documented.

## H.3 MONITORING IN-SITU BURNING OPERATIONS

### H.3.1 Background

#### H.3.1.1 Mission Statement

To provide a monitoring protocol for rapid collection of real-time, scientifically based information to assist the Unified Command with decision-making during in-situ burning operations.

#### H.3.1.2 Overview of In-situ Burning

In-situ burning of oil may offer a logistically simple, rapid, and relatively safe means for reducing the net environmental impact of an oil spill. Because a large portion of the oil is converted to gaseous combustion products, ISB can substantially reduce the need for collection, storage, transport, and disposal of recovered material. ISB, however, has several disadvantages: burning can take place only when the oil is not significantly emulsified, when wind and sea conditions are calm, and when dedicated equipment is available. In addition, ISB emits a plume of black smoke, composed primarily (80 to 85 percent) of carbon dioxide and water; the remainder of the plume is gases and particulates, mostly black carbon particulates, known as soot. These soot particulates give the smoke its dark color. Downwind of the fire, the gases dissipate to acceptable levels relatively quickly. The main public health concern is the particulates in the smoke plume.

With the acceptance of ISB as a spill response option, concerns have been raised regarding the possible effects of the particulates in the smoke plume on the general public downwind. SMART is designed to address these concerns and better aid the Unified Command in decisions related to initiating, continuing, or terminating ISB.

## H.3.2 Monitoring Procedures

### H.3.2.1 General Considerations

In general, SMART is conducted when there is a concern that the general public may be exposed to smoke from the burning oil. It follows that monitoring should be conducted when the predicted trajectory of the smoke plume indicates that the smoke may reach population centers, and the concentrations of smoke particulates at ground level may exceed safe levels. Monitoring is not required, however, when impacts are not anticipated.

Execution of ISB has a narrow window of opportunity. It is imperative that the monitoring teams are alerted of possible ISB and SMART operations as soon as burning is being considered, even if implementation is not certain. This procedure increases the likelihood of timely and orderly SMART operations.

### H.3.2.2 Sampling and Reporting

Monitoring operations deploy one or more monitoring teams. SMART recommends at least three monitoring teams for large-scale burning operations. Each team uses a real-time particulate monitor (such as the DataRAM) capable of detecting the small particulates emitted by the burn (10 microns in diameter or smaller) and a global positioning system and other equipment required for collecting and documenting the data. Each monitoring instrument provides an instantaneous particulate concentration as well as the time-weighted average over the duration of the data collection. The readings are displayed on the instrument's screen and stored in its data logger. In addition, particulate concentrations are logged manually every few minutes by the monitoring team in the recorder data log.

The monitoring teams are deployed at designated areas of concern to determine ambient concentrations of particulates before the burn starts. During the burn, sampling continues and readings are recorded both automatically in the data logger of the instrument and manually in the recorder data log. After the burn has ended and the smoke plume has dissipated, the teams remain in place for some time (15 to 30 minutes) and again sample for and record ambient particulate concentrations.

During the course of the sampling, it is expected that the instantaneous readings will vary widely; however, the calculated time-weighted average readings are less variable, because they represent the average of the readings collected over the sampling duration, and hence are a better indicator of particulate concentration trend. When the time-weighted average readings approach or exceed the Level of Concern (LOC), the team leader conveys this information to the Burn Coordinator, who passes it on to the Technical Specialist in the Planning Section (Scientific Support Coordinator, where applicable), which reviews and interprets the data and passes them, with appropriate recommendations, to the Unified Command.

#### H.3.2.3 Monitoring Locations

Monitoring locations are dictated by the potential for smoke exposure to human and environmentally sensitive areas. Taking into account the prevailing winds and atmospheric conditions, the location and magnitude of the burn, modeling output (if available), the location of population centers, and input from state and local health officials, the monitoring teams are deployed where the potential exposure to the smoke may be most substantial. Specific monitoring locations should be flexible and determined on a case-by-case basis. In general, one team is deployed at the upwind edge of a sensitive location. A second team is deployed at the downwind end of this location. Both teams remain at their designated locations, moving only to improve sampling capabilities. A third team is more mobile and is deployed at the discretion of the burn coordinator.

It should be emphasized that, while visual monitoring is conducted continuously as long as the burn takes place, air sampling using SMART is not needed if there is no potential for human exposure to the smoke.

#### H.3.2.4 Level of Concern

The LOC for SMART operations follows the National Response Team (NRT) guidelines. As of March 1999, NRT recommends a conservative upper limit of 150 micrograms of PM-10 per cubic meter of air, averaged over 1 hour. Furthermore, NRT emphasizes that this LOC does not constitute a fine line between safe and unsafe conditions but should, instead, be used as an action level. If this level is exceeded substantially, human exposure to particulates may be elevated to a degree that justifies action; however, if particulate levels remain generally below the recommended limit with few or no transitory excursions above it, there is no reason to believe that the population is being exposed to particulate concentrations above the EPA's National Ambient Air Quality Standard (NAAQS).

Real-time particulate monitoring is one factor among several, including smoke modeling and trajectory analysis, visual observations, and behavior of the smoke plume. The Unified Command must determine early in the response what conditions, in addition to the LOC, justify termination of a burn or other action to protect public health.

When addressing particulate monitoring for ISB, NRT emphasizes that concentration trends, rather than individual readings, should be used to decide whether to continue or terminate the burn. For SMART operations, the time-weighted average (TWA) generated by the particulate monitors should be used to ascertain the trends. The NRT recommends that burning not take place if the air quality in the region already exceeds the NAAQS and if burning the oil will add to the particulate exposure concentration. SMART can be used to take background readings to indicate whether the region is within the NAAQS, before the burn operation takes place. The monitoring teams should report ambient readings to the Unified Command, especially if these readings approach or exceed the NAAQS.

#### H.3.2.5 SMART as Part of the ICS Organization

SMART activities are directed by the Operations Section Chief in the Incident Command System (ICS). It is recommended that a "group" be formed in the Operations Section that directs the monitoring effort. The head of this group is the Monitoring Group Supervisor. Under each group there are monitoring teams. At a minimum, each monitoring team consists of two trained members: a monitor and assistant monitor. An additional team member could be used to assist with sampling and recording. The monitor serves as the team leader. The teams report to the Monitoring Group Supervisor who directs and coordinates team operations, under the control of the Operations Section Chief.

#### H.3.2.6 Information Flow and Data Handling

Communication of monitoring results should flow from the field (Monitoring Group Supervisor) to those persons in the Unified Command who can interpret the results and use the data. Typically, this falls under the responsibility of a Technical Specialist on ISB in the Planning Section of the command structure.

The observation and monitoring data will flow from the Monitoring Teams to the Monitoring Group Supervisor. The Group Supervisor forwards the data to the Technical Specialist. The Technical Specialist or his/her representative reviews the data and, most important, formulates recommendations based on the data. The Technical Specialist communicates these recommendations to the Unified Command.

Quality assurance and control should be applied to the data at all levels. The Technical Specialist is the custodian of the data during the operation, but ultimately the data belong to the Unified Command. The Unified Command should ensure that the data are properly archived, presentable, and accessible for the benefit of future monitoring operations.

## H.4 SMART RESOURCES

Comments and suggestions on the SMART program and document
Fax: 206 526-6329
Email: smart.mail@noaa.gov

SMART Web Sites
http://response.restoration.noaa.gov/oilaids/SMART/SMART.html
http://www.uscg.mil/hq/g-m/mor/gmor-3.htm

U.S.Coast Guard
http://www.uscg.mil/

USCG National Strike Force
http://www.uscg.mil/hq/nsfcc/nsfweb/

NOAA OR&R
http://response.restoration.noaa.gov/index.html

# APPENDIX I
# VESSEL BURNING - *NEW CARISSA* LESSONS LEARNED

A decision was made to burn the fuel oil in place aboard the *NEW CARISSA* before it was to be towed offshore and sunk in deep water. It is highly desirable to remove all oil from a vessel before it sinks because it is likely to eventually release its oil cargo and pollute the local area over time. In these rare cases, the option of burning the oil while it still resides in the vessel is viable as a method to prevent a spill during salvage, sinking, or scuttling operations. This is a difficult operation because ships are designed to prevent the spread of fire and the fires are potentially dangerous to initiate. Such an operation may have additional risks, such as tenuous ship stability and rough sea state, making it difficult to board and move around the ship safely. Lessons learned from the *NEW CARISSA* operation are presented below. As seen in Figure I-1, napalm was used to ignite the oil.

- Offload oil from a stricken vessel in danger of sinking as soon as possible.
- Heated heavy fuel oil may quickly solidify as it cools, making offloading impossible.
- It is particularly difficult to burn oil contained in a fuel tank aboard ship because there is very often no access to the tanks.
- The fire needs an air (oxygen) source and free surface of the fuel to sustain a burn.
- The ignition process used worked quite well:
  - Bangoloire line-shaped charges were placed in a crossed pattern along the top of each fuel tank.
  - Additional shaped charges were detonated to provide air access to the ruptured tanks.
  - Aluminized napalm ignited the exposed fuel.

Figure I-1. *NEW CARISSA* assisted burn operation (USCG photo, 12 February 1999).

# APPENDIX J CONVERSION TABLES

## VOLUME

1 U.S. Gallon = 231 $in^3$ = 0.1337 $ft^3$
1 BBL = 42 Gal = 5.615 $ft^3$
1 BBL = 158.97 L = 0.159 $m^3$
1 gal = 3.785 L
1 L = 0.26 gal
1 "ton" of oil = 1,000 L = 1 $m^3$ = about 264 gal
1 $m^3$ = 6.29 BBL = 264.2 gal
1 $ft^3$ = 0.0283 $m^3$ = 7.48 gal
1 $m^3$ = $10^6$ $cm^3$ = $10^3$ L
Imperial gallons X 1.2 = U.S. gallons
U.S. gallons X 0.83 = Imp. gallons
Gallons X 0.0038 = $m^3$

## VOLUME RATE

L/hr X 0.0063 = BBL/hr
L/hr X 0.0044 = gpm
L/s X 3.6 = $m^3$/hr
Tons/hr (or $m^3$/hr) X 4.4 = gpm
Tons/hr X 6.3 = BBL/hr
BBL/hr X 0.159 = $m^3$/hr
gpm X 1.43 = BBL/hr
BBL/hr X 0.7 = gpm
L/sec X 15.9 = gpm
gpm X 0.23 = $m^3$/hr
gpm X 1.43 = BBL/hr
gpm X 34.29 = BBL/day
$m^3$/hr X 16.7 = L/min
$m^3$/hr X 6.29 = BBL/hr
L/min X 0.06 = $m^3$/hr
L/min X 0.377 = BBL/hr
gpm X 3.785 = L/min
BBL/day X 0.11 = L/min
BBL/day X 0.0292 = gpm
$m^3$/sec X $10^{-3}$ X 3.6 = $m^3$/hr

## AREA

1 hectare = 10,000 $m^2$ (a 100 m square)
1 acre = 43,560 $ft^2$ = 0.4047 hectares
1 hectare = 2.471 acres
1 $ft^2$ = 0.0929 $m^2$

## AREA APPLICATION

gallons/acre X 9.35 = L/hectare
L/$m^2$ = thickness in mm
Area ($ft^2$) X Thickness (inches) X 0.623 = Volume (gallons)

## SPILL ENCOUNTER RATE

Spill Encounter Rate (BBL/hr) = (Sweep Width [ft]/6076) X Skimming Speed (knots) X Slick Thickness (mm) X 21,570

Spill Encounter Rate (m3/hr) = (Sweep Width [m]/1,852) X Skimming Speed (knots) X Slick Thickness (mm) X 3,430

## LENGTH

1 inch = 2.54 cm = 25.4 mm
1 foot = 30.48 cm
1 foot = 0.3048 m
1 meter = 3.2808 feet
cm X 0.0328 = FT
1 statute mile = 0.87 NM
1 nautical mile = 6,076 feet
1 kilometer = 0.54 nautical miles
1 NM = 1.852 km = 1,852 m
1 NM = 1.15 Statute miles
1 micron = m X $10^{-6}$ = mm X $10^{-3}$
1 fathom (6 ft) = 1.829 m
1 m = 0.547 fathoms

## DISTANCE RATE

1 knot = 1.69 ft/sec
ft/sec X 0.593 = knots
m/sec X 1.94 = knots (about 2 X)
m/s X 3.28 = FT/sec
mph X 1.5 = ft/sec
knots X 51.4 = cm/sec

## WEIGHT

1 pound = 0.45 kilograms
1 kilogram = 2.2 pounds
lb/ft X 1.48 = kg/m
kg/m X 0.672 = pounds/ft
1 metric ton = 1,000 kg
1 long ton = 2240 pounds